MIAMI BAYWALK & RIVERWALK

Waterfront Materials Index

Supplemental to Waterfront Standards and Waterfront Design Guidelines found in **Section 3.11** and Appendix B of Miami 21
Adopted by City of Miami Resolution xxxx on July 22, 2021

ACKNOWLEDGEMENTS

City of Miami
444 SW 2nd Avenue
Miami, FL 33130
(305) 416-1400

Planning Department
Office of Capital Improvements
Department of Resilience and Public Works

Mayor, Francis X. Suarez
Commissioner, Alex Diaz de la Portilla, District 1
Commissioner, Ken Russell, District 2
Commissioner, Joe Carollo, District 3
Commissioner, Manolo Reyes, District 4
Commissioner, Jeffrey Watson, District 5
City Manager, Arthur Noriega

Miami Downtown Development Authority
200 S. Biscayne Blvd. | Suite 2929
Miami, FL 33131
(305) 379-6675

Miami River Commission
1407 NW 7th St d
Miami, FL 33125
(305) 644-0544

Savino Miller Design Studio (Lead Design Consultant)
12345 NE 6th Ave # A
North Miami, FL 33161
(305) 895-9082

RSM Design (Brand, Logo & Wayfinding)
160 Avenida Cabrillo
San Clemente, CA 92672
(949) 492-9479

Special Thanks To: Horacio Aguirre, Daniel Alzuri, Brett Bibeau, Cody Clark, Esteban Ferreiro, Cesar Garcia-Pons, Jeremy Calleros Gauger, Robert Hill, Maria Hernandez, Christopher Hodgkins, Barry Miller, Elizabeth Plater-Zyberk, Adriana Savino, Neal Schafers, Suzanne Schwartz, Patrice Gillespie Smith, David Snow & Troy Simmons

Updated June, 2021

CONTENTS

4 PROJECT MAPS

6 MATERIALS

- 6 SIGNAGE & WAYFINDING
- 14 HARDSCAPE
- 18 LIGHTING
- 24 SITE FURNITURE
- 33 PLANTING

58 MATERIALS MATRIX

67 APPENDIX

Project Limits Map

NOTE: Waterfront Materials Index supplements the Waterfront Design Guidelines found in Appendix B of Miami 21.
Where and when this Index and the Guidelines apply is found in Waterfront Standards in Section 3.11 of Miami 21 which includes the map below.

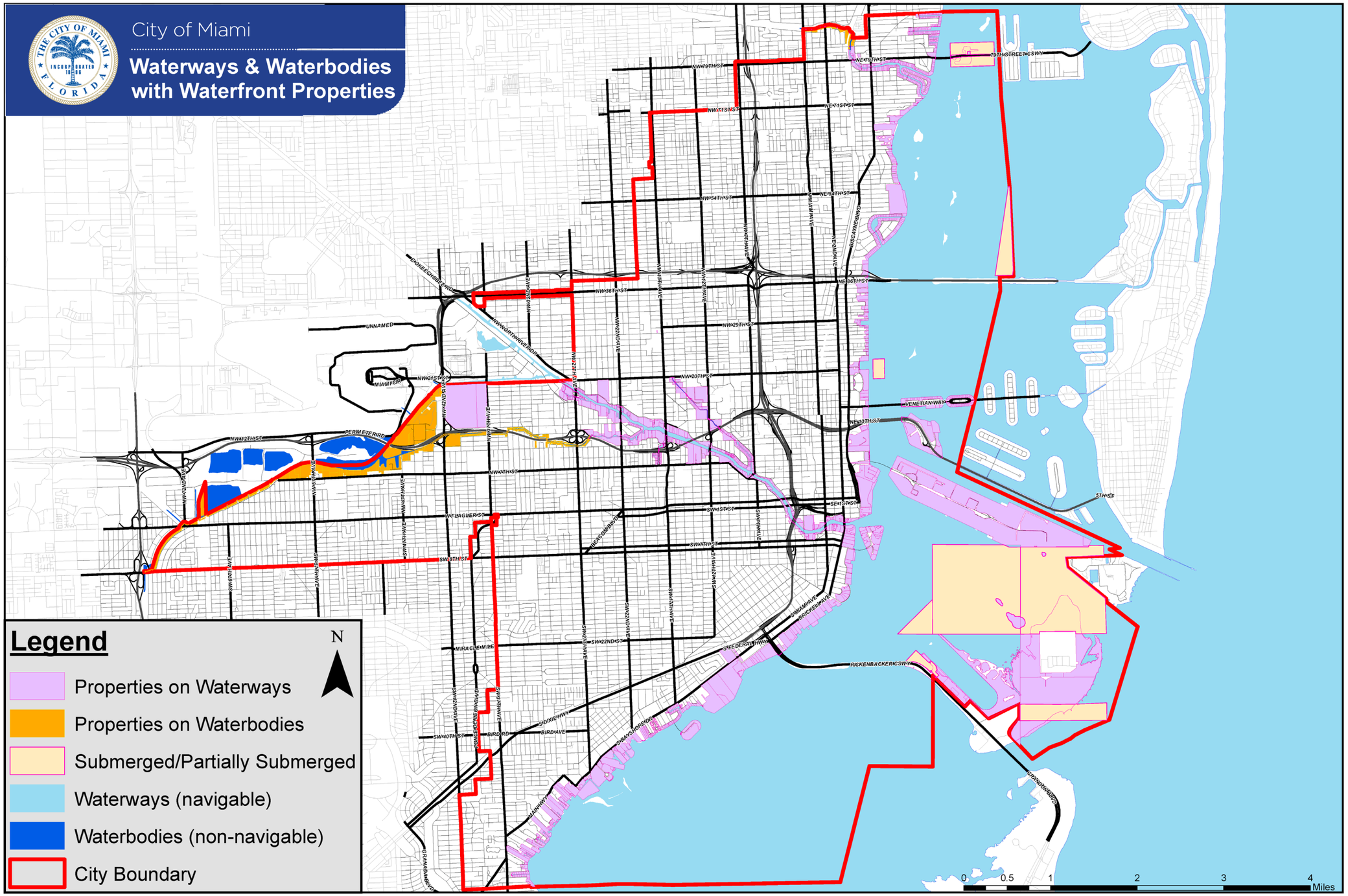

Project Connectivity Map

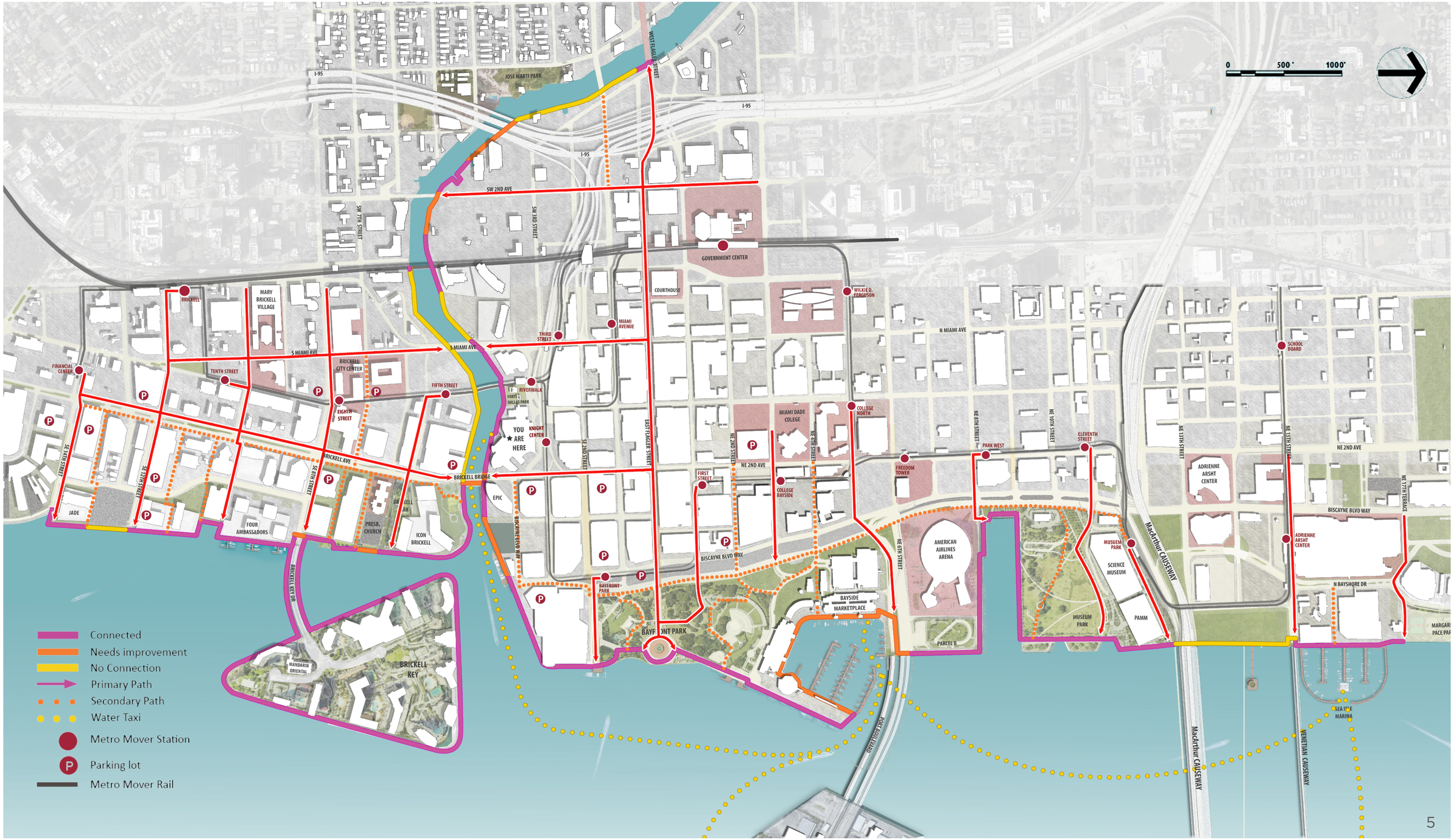

SIGNAGE & WAYFINDING

Brand, Logo & Design Pillars

Five pillars were identified as the inspiration for this effort: Ecology, History, Culture, Resiliency & Identity. The Miami Baywalk & Riverwalk will provide an experience that will celebrate Biscayne Bay and the Miami River ecology, history, & culture by connecting people to a continuous, vibrant, resilient and iconic waterfront.

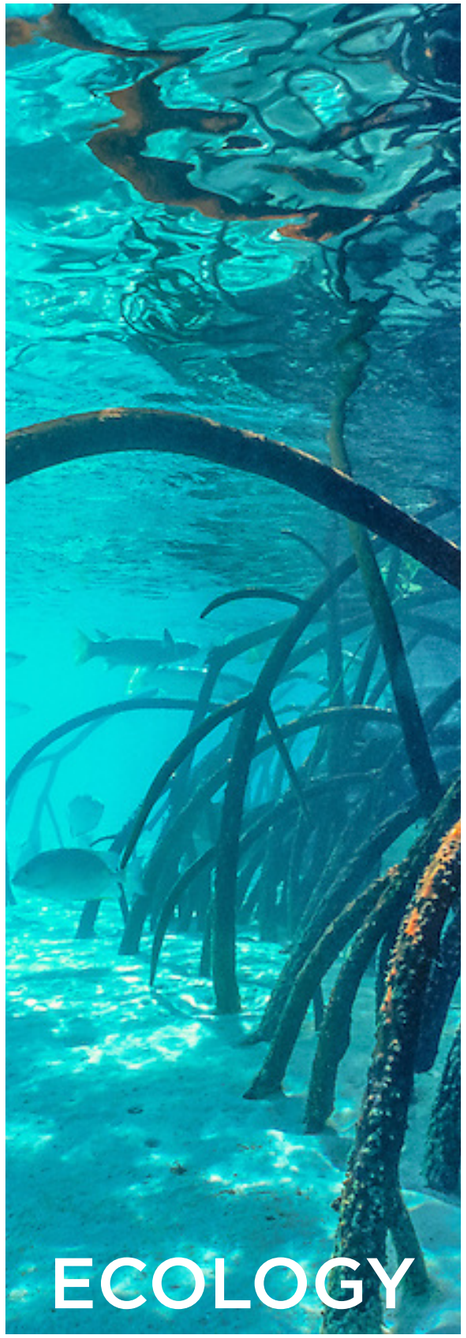

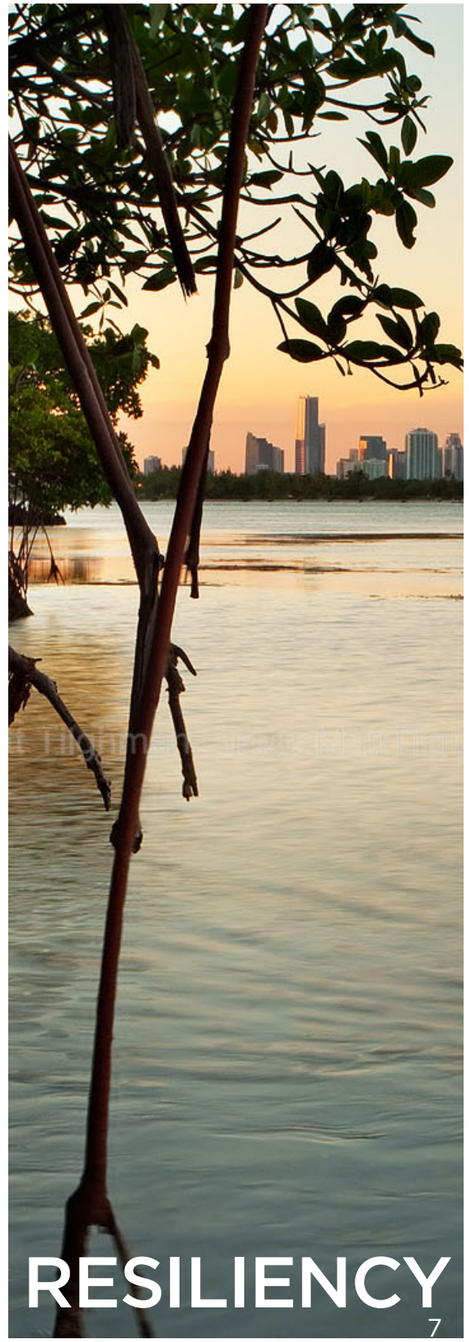

Miami Baywalk Brand & Logo

The brand draws inspiration from the nature and history of this unique waterfront. The prismatic nature of Miami, essentially a composite of people, language, culture, all forming a dynamic and colorful community bonded together by establishing roots into the earth, much like the Mangrove colonizes and helps form new land. Mangrove, water, sky, ever-changing light, limestone, the diversity of both culture, flora and fauna all contribute to the landscape.

The branding strategy and logo is an abstraction of the mangrove and a reflection of Miami's unique multi-faceted diversity. The brand's colors are the colors of the sky and the sunrise and sunsets reflected in the clouds and waters.

PRIMARY LOGO LOCK-UP

To be used on print, web & social media

MIAMI
BAYWALK

LOGO MARK

Stand alone

Guidelines

The Miami Baywalk primary logo lock-up should be used in its original state whenever possible. For any instance it can not, the following secondary logo lock-ups are approved for use. The icon was designed for signage and can be used on its own to represent Miami Baywalk

SECONDARY LOGO LOCK-UP

To be used for signage and advertising

MIAMI
BAYWALK

Font Standards

Miami Baywalk will utilize the geometric sans-serif typeface of Neutra Display Bold for use in signage only. Since its release, the Neutra Display font has been immensely popular for an extensive range of different applications.

Trade Gothic Condensed No.20 is utilized for Pedestrian Street Signs where a condensed font is needed to fit a large range of street names.

PRIMARY SIGNAGE FONT

NEUTRA DISPLAY BOLD

Font to be used on all signage for wayfinding or directional information

Aa

ABCDEFGHIJKLMNOPQRSTUVWXYZ
abcdefghijklmnopqrstuvwxyz
1234567890

SECONDARY SIGNAGE FONT

TRADE GOTHIC CONDENSED No.20

Font to be used on the District Orientation Map only.

Aa

ABCDEFGHIJKLMNOPQRSTUVWXYZ
abcdefghijklmnopqrstuvwxyz
1234567890

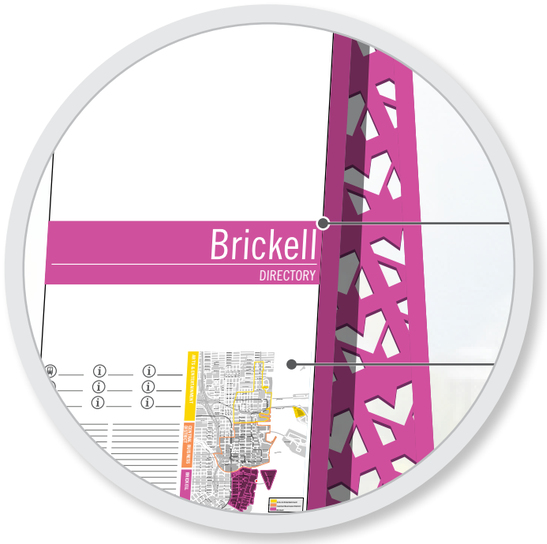

Colors and Materials

Signage materials on the Miami Baywalk will be an elegant mix of natural finishes and painted metals with internally illuminated messaging and changeable directory/tenant graphics. Materials should be consistent with architectural and hardscape finishes and be resilient to weather and wind conditions.

PAINTS

All paints to have Satin Finish unless otherwise specified. All painted surfaces are to be on aluminum.

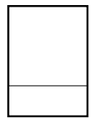

P1
MP32071
Wonder
White

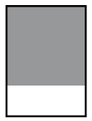

P2
MP05295
Neutral Grey

P3
MP04761
Steel Wool

P4
Miami Baywalk
Branded
Gradient

DISTRICT COLORS

BRICKELL DISTRICT

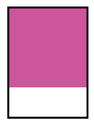

P5
MP05041
Roseate Spoonbill

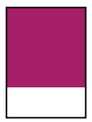

P6
MP12477
Orchis Purple

OMNI DISTRICT

P7
MP00190
Matchbox Car
Orange

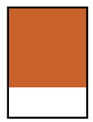

P8
MP00205
Orange Ember

DOWNTOWN DISTRICT

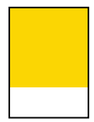

P9
MP12528
Yellow Crownbeard

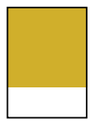

P10
MP00142
Golden Oldie

DISTRICT COLORS

BRICKELL DISTRICT

P11
Brickell District
Gradient

OMNI DISTRICT

P12
Omni District
Gradient

DOWNTOWN DISTRICT

P13
Downtown District
Gradient

MATERIALS

All materials to be provided as 8" x 8" sample or as part of a mock-up for approval.

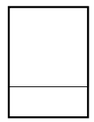

M1
Frosted Acrylic

Miami Baywalk District Flag Directional on Existing Pole **(REQUIRED)**

Baywalk signage is required on all waterfront properties east of the Brickell Bridge.

NOTES: Miami Baywalk directional signage on existing street poles.

General Guidelines:

1. District Flag Directional Sign **must** be placed at both ingress and egress of property location.
2. Property owner is allowed to inscribe name of their building on the opposite side of one of the signs
3. Always locate at key decision points for pedestrian usage
4. Directional message should be flush with directional arrow
5. Directional message should appear as Upper case
6. Miami Baywalk logo mark to always be placed at base of message blades
7. Color on returns to change per district
8. Always use Matthews clear coat for color fastners and protection

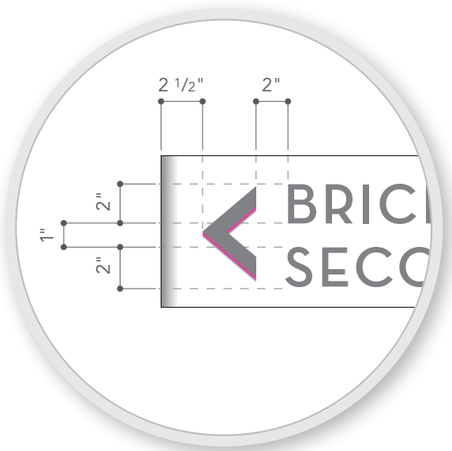

A DETAIL VIEW
SCALE | 1 1/2" = 1'

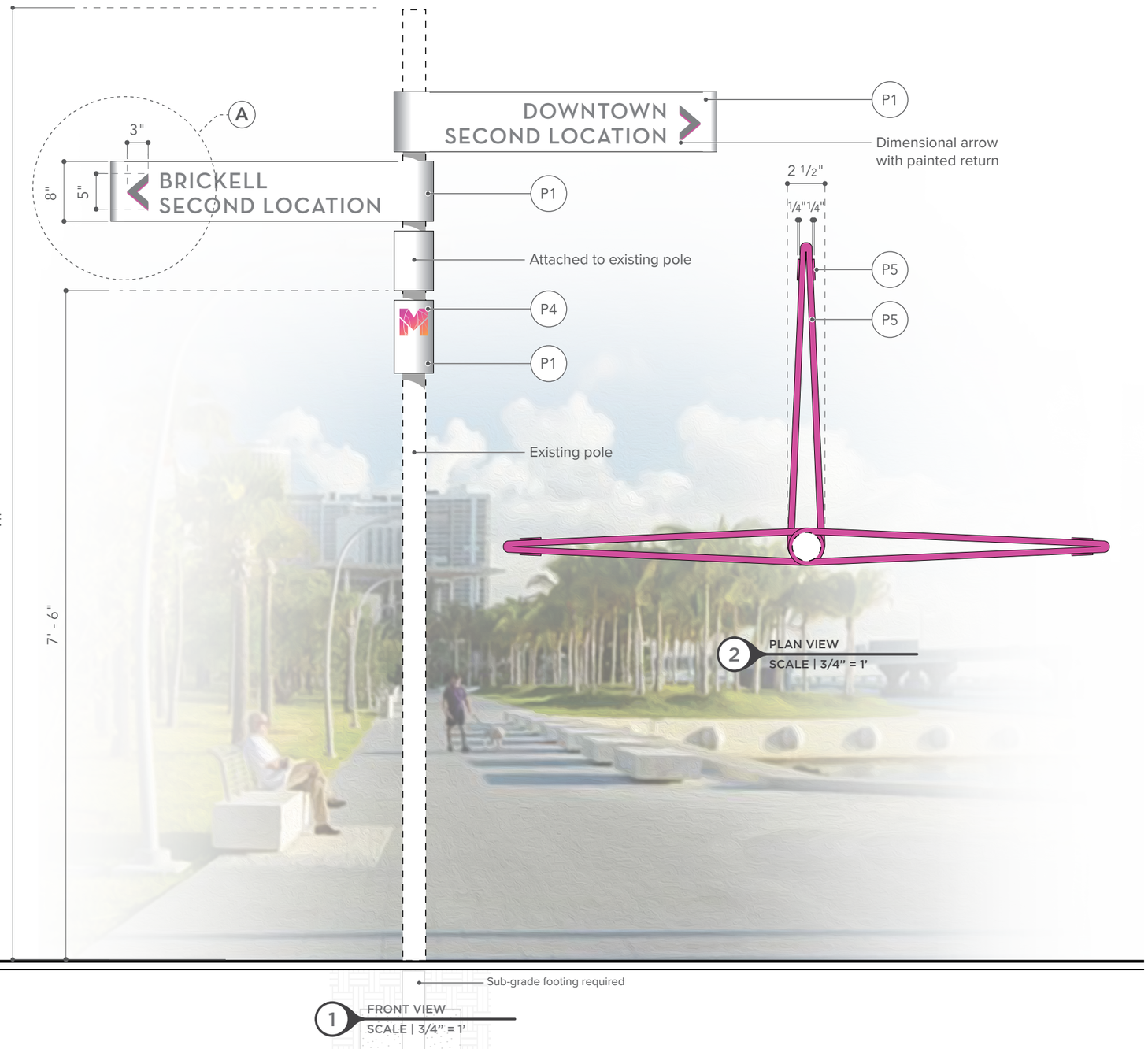

2 PLAN VIEW
SCALE | 3/4" = 1'

1 FRONT VIEW
SCALE | 3/4" = 1'

Miami Baywalk District Identity Sign **(REQUIRED)**

Baywalk signage is required on all waterfront properties east of the Brickell Bridge.

NOTES: Color coded district identity signs with perforated panel and internal illumination.

General Guidelines:

1. District Identity Sign **must** be placed at midpoint of property.
2. If property owner desires to place more than one District Identity Sign on their property, they are allowed.
3. Double-sided sign panel with district name
4. Miami Baywalk logo mark to always be placed at top of sign
5. Color on returns to change per district
6. Always use Matthews clear coat for color fastners and protection

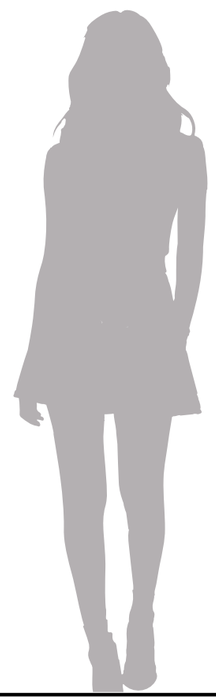

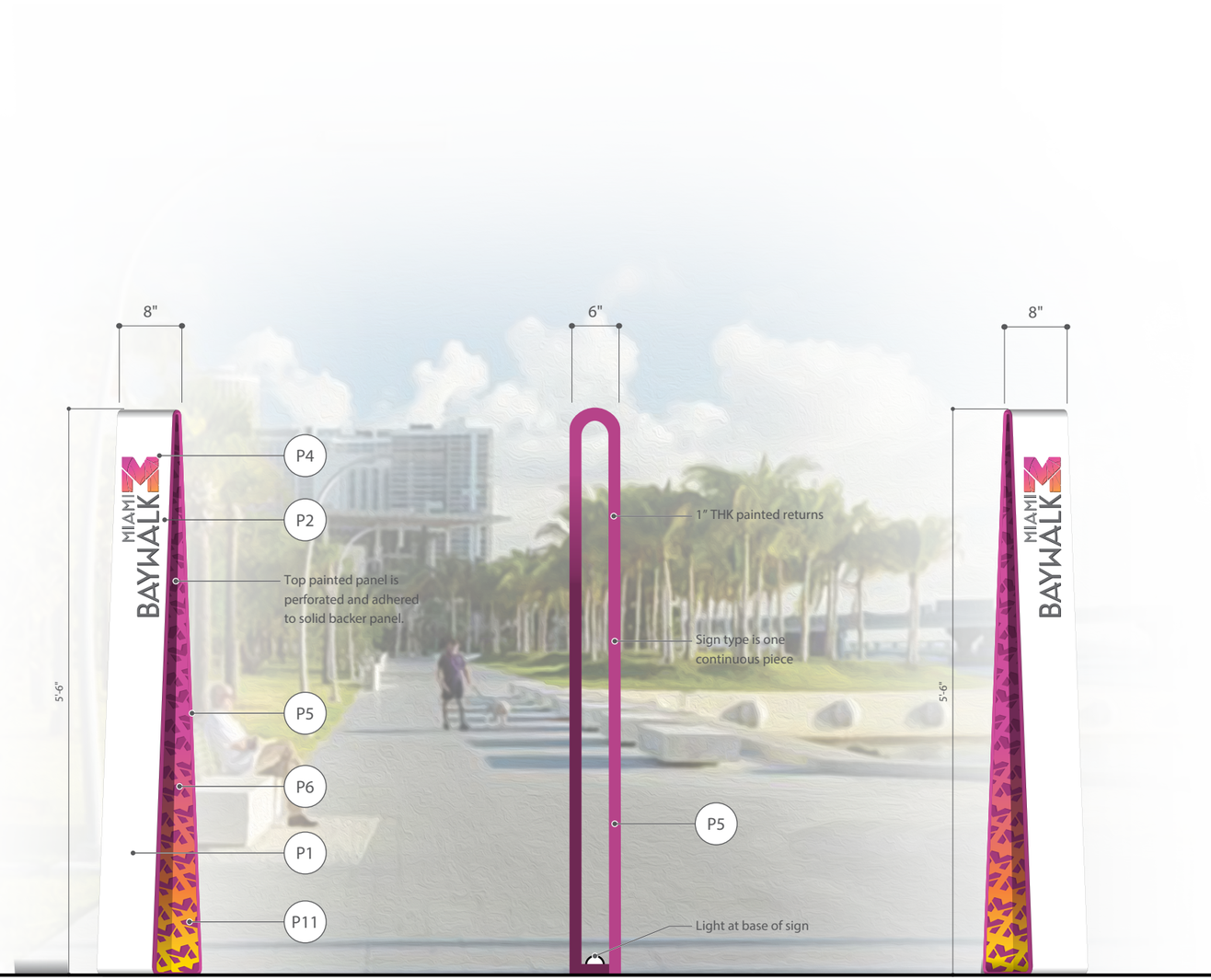

1 FRONT VIEW
SCALE | 3/4" = 1'

2 SIDE VIEW
SCALE | 3/4" = 1'

3 BACK VIEW
SCALE | 3/4" = 1'

Miami Riverwalk Signage **(REQUIRED)**

NOTE: Please refer to “Miami Greenway: Wayfinding and Environmental Graphics Specifications” in the Appendix or at http://archive.miamigov.com/planning/docs/guidelines/Miami_River_Greenway_Signage_Design_Specifications_and_Guildelines.pdf
Riverwalk signage is required on both sides of the river on all waterfront properties west of the the Brickell Bridge, except T3.

1 PEDESTRIAN DIRECTIONAL
SCALE | 3/4” = 1’

W-PED

2 PEDESTRIAN KIOSK
SCALE | 3/4” = 1’

W-KSK

3 HISTORIC MARKER
SCALE | 3/4” = 1’

H-HIS

4 PERIMETER PEDESTRIAN DIRECTIONAL
SCALE | 3/4” = 1’

W-PRM

HARDSCAPE

Paving & Hardscape Background & Intent

Today there are many paving and hardscape styles, patterns and materials along the Miami Baywalk & Riverwalk. For paving, most properties show concrete pavers in different colors and patterns. Consistent use of selected paving materials enriches the pedestrian environment, improves its functional and aesthetic qualities, and furthers the goal of unifying the Miami Baywalk & Riverwalk.

Paving materials should be compatible with the desired intent and function of the space in which they are used. The family of paving materials, commonly used in marine environments, should include concrete pavers, pervious pavers, stone pavers, with or without aggregates, river rock and concrete.

Concrete pavers are recommended as the standard paving material that ties to existing paver installations and provide a unified feel. Selecting pavers in neutral tones such as “gray” and “sand” with natural aggregates, such as marble chips and seashells, is an effective way to transition between properties and build the new sections of the Miami Baywalk & Riverwalk. Concrete pavers are also highly functional because they are easy to maintain and replace. It also provides a resilient alternative to poured concrete by incorporating pervious paving infrastructure using concrete pavers.

<u>Goals:</u>

- Create a unified paving material both in the visual and tactile sense
- Reduce maintenance requirements with easy to maintain and replace paving materials
- Promote sustainability and resiliency with locally-sourced and manufactured paving materials, as well as pavers that can be adapted to a permeable paving system

<u>Paving Guidelines:</u>

- Paving should have a low reflectance albedo (minimum 0.3 factor) to reduce glare and heat absorption to decrease the heat-island effect.
- Permeable paving materials shall be used to reduce stormwater utility infrastructure and promote the filtration and collection of stormwater.
- Concrete pavers shall be used to visually and tactilely unify the promenade together.
- Concrete paving materials shall incorporate recycled materials where practical (i.e. glass aggregate, fly ash, or recycled aggregates) and/or shells, stones and other natural marine aggregates.
- Concrete with salt finish or shell aggregate should be used in steps adjacent to the water. A stainless steel anti-slip mesh shall be fixed to the upper “wet” concrete steps.
- For proposed walkways over water, wood decking or recycled plastic such as reclaimed, thermally-modified/acetylized wood may be used.

Concrete pavers give the Miami Baywalk & Riverwalk a unified, but distinct character. They are also easy to maintain and replace. LEFT: Miami Riverside Center heading to SW 1st Ave Bridge. RIGHT: Bayfront Park heading to Bayside Marketplace.

Pavers (**Mandatory,** or approved equivalent)

- Select pavers in neutral tones such as “gray” and “sand” with natural aggregates, such as marble chips and seashells
- Utilize mortared river rock as a detectable paver for the waterfront edge and around benches for protection against skateboards.
- Paving shall be laid in a running bond pattern for pedestrian areas and herringbone in areas where vehicular use is required for emergency access.
- Poured-in-place rubberized play surface and artificial turf shall be added in playground and fall areas.
- Any proposed material to be incorporated should reflect the nature and character of the site as a waterfront marine environment.
- All materials and colors shall be approved by the City of Miami Planning Department.

Maintenance:

- Quarterly weeding at paver joints
- Quarterly pressure cleaning
- If required, the sealing of pavers to minimize stains in high-intensity use zones (i.e. cafe areas), shall be restricted to clear, penetrating, non-glare sealers
- All sealed pavers shall be re-sealed on an annual basis

Wood Guidelines:

Timber structures, typically, require a relatively high commitment to maintenance and repair, especially in outdoor areas exposed to water, salt, wind and intense sun conditions. It is important that this is budgeted for at the outset and considered within the design approach and selection of materials. These maintenance regimes will require a combination of routine inspections and reactive repairs. For these reasons the use of wood should be carefully considered. The use of naturally durable timber such as reclaimed Greenheart wood (primarily from marine piles) is recommended for permanently wet exposed environments. Other types of wood, such as thermally modified wood with less moisture content, are recommended. Recycled reclaimed timber is also recommended as a source material. Potential sources of reclaimed timbers include posts and beams from demolished warehouses, pilings and beams from dismantled piers and planks.

- All timbers have a machined finish. The hardwood timber shall be left in its natural state.
- Fittings are made from stainless steel or aluminum.
- All wood shall be separated from stone and/or concrete base by a minimum of 4” to allow for air circulation and on top of a metal flashing with a drip edge.

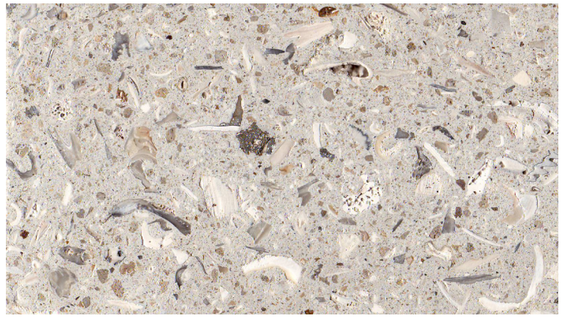

- Concrete Permeable Paver
- Concrete with marble chip or seashell aggregate
- Old Castle Paving, or approved equal
- 3” x 12” X 3 1/8 th” or 4” x 16” x 4” th or 12” x 6” x 3 1/8 th (for heavy vehicular use only)
- Exposed aggregate; spacers on all edges; light/natural gray, sand or buff color

- Cast-in-place decorative concrete paving
- White Portland Cement with exposed seashell aggregate
- Light sandblast
- Limited use only

- Detectable paving band
- White/Brown River Rock
- 1”-3” pebble
- Set in thickset mortar bed
- Match existing

It is critical that the right species of wood is selected for each job. Selection of the appropriate material is largely determined by the original materials and anticipated residual life of all components. It is recommended to keep a stock of appropriately dimensioned timbers to allow for example, deck planks or wood benches slats to be repaired with the minimum of delay.

Wood substitutes are acceptable if they meet the minimum standard of 95% pre-consumer and post-consumer content. Kebony, Resysta, and Recycled Plastic Wood, are acceptable alternative materials. Potential uses of wood or alternative materials on the Miami Baywalk & Riverwalk include: wood decking on boardwalks or piers and for benches.

Paving Details

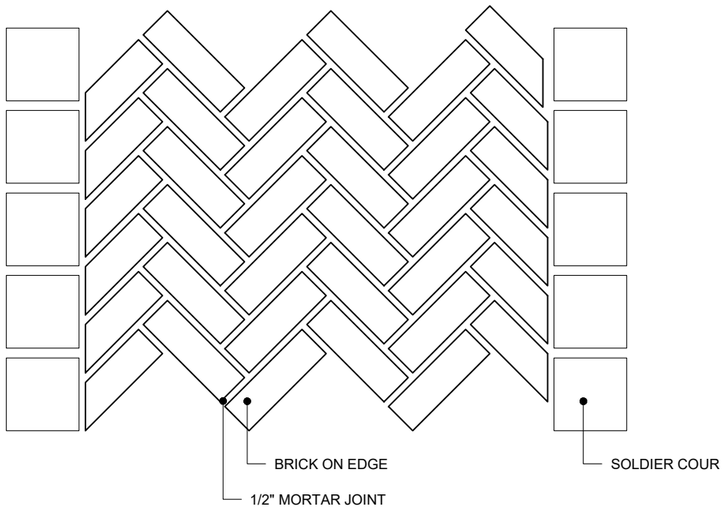

HERRINGBONE PATTERN DETAIL
SCALE: NTS

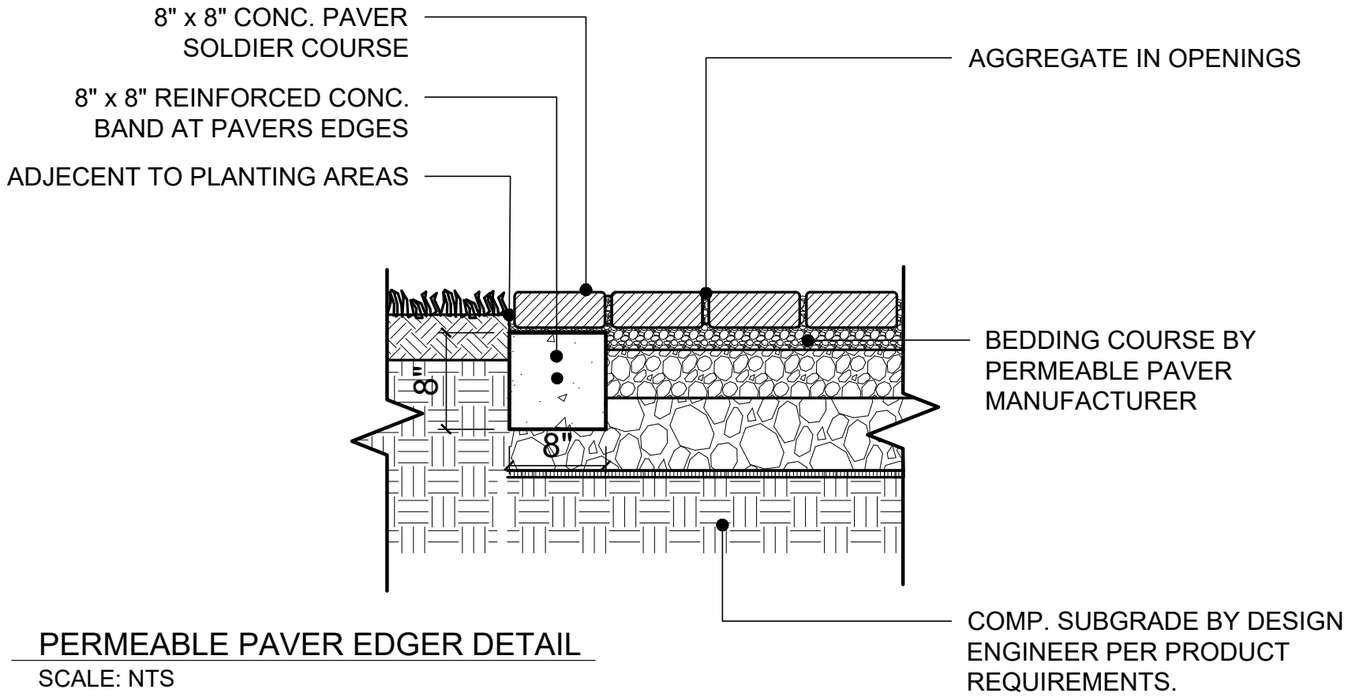

PERMEABLE PAVER EDGER DETAIL
SCALE: NTS

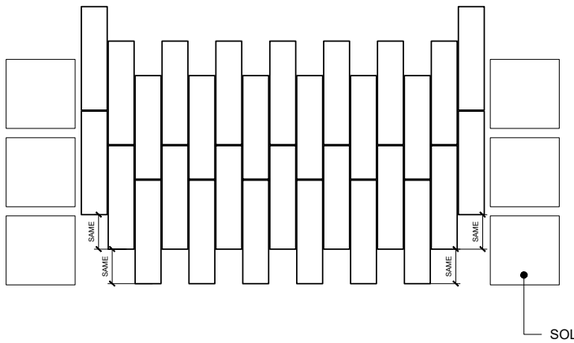

RUNNING BOND PATTERN DETAIL
SCALE: NTS

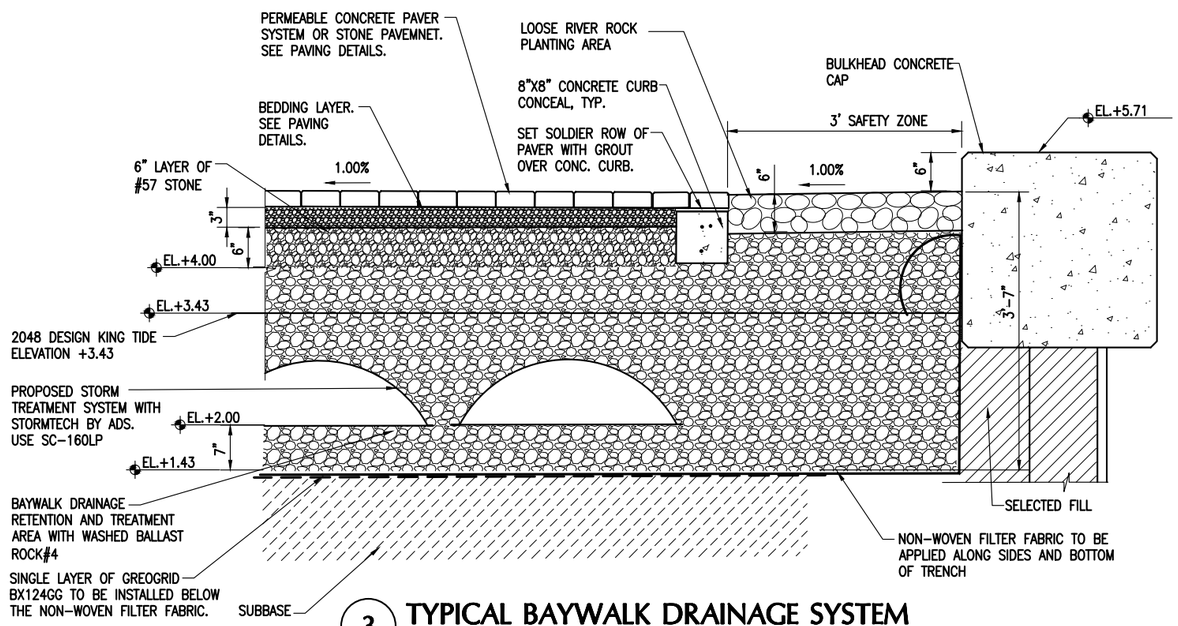

3 TYPICAL BAYWALK DRAINAGE SYSTEM
SCALE: NTS

NOTE: See appendix for full details

LIGHTING

Lighting Background & Intent

The light fixture design and colors are inspired by the sights, sounds and forms of Biscayne Bay and Miami River. Much like the mangrove's arching roots, the light fixture is designed for the bayfront arches over the walkway. Along the River, the light pole reflects the masts and rigging of sailboats. To create a unifying element, each light is designed with a small accent LED light – a thin linear strip on the bayfront and a small triangle on the riverfront – that forms a nighttime "pink necklace" - symbolizing our sky's colors, the flamingo, and shrimp – which can be seen by land, water and air. Additionally, the fixtures will be equipped with technology that allows other colors to be projected at any time, to adapt to each season if the City so desires.

The lighting for the Miami Baywalk & Riverwalk will transform the nighttime experience of Miami's "front porch" from both the land and the sea. Lighting will make the waterfront not only a world-renowned community amenity, but also an economic driver at night. This amenity will be used late into the evening, therefore we must use light to define how people will "see and be seen" in their surrounding environment. This approach considers layers of light, vertical illumination, long distance visual cues, glare, visual acuity and contributions from surrounding elements i.e., architectural aerial lighting, landscape features and signage.

Other important aspects of lighting are longevity, controllability, sustainability and maintainability. The project endeavors to use a vocabulary of fixtures that are familiar with the waterfront and can build on a family of fixtures that can enhance the branding. It is proposed to use cutting edge long life LED technology that is highly efficient to maximize lifetime operating costs. Smart wireless control techniques may be implemented to manage light levels after hours when the path is less frequently used as well as monitor fixture conditions by maintenance teams. The fixtures will be resilient to environmental conditions and the realities of the waterfront elements such as salt, water and wind. Our goals are to put the right light in the right place at the right time, to provide an energy effective, dynamic solution that defines and celebrates the Miami waterfront for many years to come.

<u>Lighting Goals:</u>

- Create a visual necklace to connect the entire downtown waterfront
- Architectural integration with the iconic Miami waterfront and district identity
- Safety and security - good visual acuity
- Create hierarchy - pedestrian experience
- Optical control (full cut-off "dark sky" luminaries, glare reduction, and dimming levels)
- Maintainability, resilience and sustainability
- Energy efficiency with LED and solar fixtures
- Budget
- Dynamic qualities (eco-intelligence, dimming/motion activation): Wireless sensors to optimize energy savings, minimize light trespass and enhance security.

Baywalk curved lightpole
with colored LED strip

Riverwalk "mast" lightpole
with colored LED cap

"Necklace" of light on the bayfront

Goals:

The goal for lighting at the Miami Baywalk & Riverwalk is to create a stimulating yet respectful connection along this iconic public waterfront. One of the ways to activate the connective spine is to use multiple layers of light:

- **High Level Ambient Light - Typical Pathway Area Lights:** Connection, consistent, rhythm/intervals.
- **Mid Level Destination Light - Unifying Design Element:** Color light band, mangrove trellis, observation towers, shoreline steps, water features, artwork, illuminated signage, gaming areas.
- **Low Level Wayfinding and Placemaking Light:** Marker lighting to define paths, under bench lighting and specimen tree lighting.

Criteria:

Based on existing Museum Park illumination criteria and recommended IESNA 10th Ed. values for high activity in lighting zone 3:

- Average maintained horizontal illuminance at ground level - 1fc
- Average maintained vertical illuminance - 0.3fc
- Average to minimum uniformity ratio - 5:1 or less

References:

- IESNA RP-33-14 Lighting for Exterior Environments
- IESNA G-1-03 Security, People, public Spaces
- IESNA Lighting Handbook 10th Edition
- Miami Dade Parks and Recreation
- FBC 6th Edition 2017

Basic control system:

- The controls shall meet the current edition of the Florida Building Code at time of construction These guidelines are based off of the Florida Building Code 6th Edition 2017.
- Typical pathway lighting designated for dusk-to-dawn operation shall be controlled by an astronomical time switch or photosensor. All time switches shall be capable of retaining programming and the time setting during loss of power for a period of at least 10 hours.
- Solar powered paver lights shall be illuminated through the night based on amount of UV power collected throughout the day.
- Any requirements for code related illumination including but not limited to egress, emergency and exit lighting shall be shown on the Electrical Drawings.

Benefits of an adaptive wireless control system:

- Extends lamp life
- Adaptive dimming through motion sensors
- Reduces power consumption
- Reduces light trespass in residential neighborhoods
- System management and reporting

A traditional lighting control system requires line voltage power infrastructure continuously along the path, which can be expensive and labor intensive. By taking advantage of advanced technologies, such as Bluetooth Low Energy (BLE) enabled devices (i.e Casambi), within fixtures it is possible to create a fully addressable wireless point to point mesh network without having to pull any additional control wiring. Once control over fixtures is enabled, fixtures can be remotely turned on and off, dimmed, change colors, grouped into zones and configured into scenes and animations, set on timeclocks with weekly and yearly calendars and relay information back about the fixture life status all from the app installed on a phone or tablet. One of the greatest sustainability advantages is to pair BLE devices with motion and daylight sensors and to apply adaptive lighting strategies after normal operation hours. Fixtures can be programmed to turn on to full at dusk, dim after hours, turn back to full on only when motion is detected and then fully shutoff at sunrise. This strategy extends lamp life, reduces power consumption, and reduces light trespass in residential neighborhoods.

Ideally every fixture would be installed with a BLE device, however with budget in mind the first most critical light feature to be installed with BLE technology is the color changing feature on the typical pole lights. By having control over this fixture the color can be changed on the UDE for special holidays and events. This builds civic pride, engages visitors, and adds a dynamic feature to the waterfront. The secondary component recommended to have BLE control would be the typical overhead area lights paired with sensors; therefore employing an adaptive lighting control strategy to reduce the overall energy consumption along the entire path.

Maintenance

The average rated life for the LED lighting utilized on the Baywalk & Riverwalk ranges from a minimum of 30,000 hrs to 50,000 hours, which is approximately 6.8 to 11.4 years with an average operating period of 12 hrs/day and it is recommended to purchase extended warranties when available. Fixtures with remote drivers shall have the drivers located in easily accessible well ventilated locations that are protected from the elements to prevent overheating and premature failure. Fixtures shall be specified with marine grade finishes and a minimum IP66 rating to withstand the environmental elements. Fixtures shall be procured through North American companies to facilitate long term future maintenance and replacement.

Baywalk & Riverwalk Lightpoles (**MANDATORY** or approved equivalent)

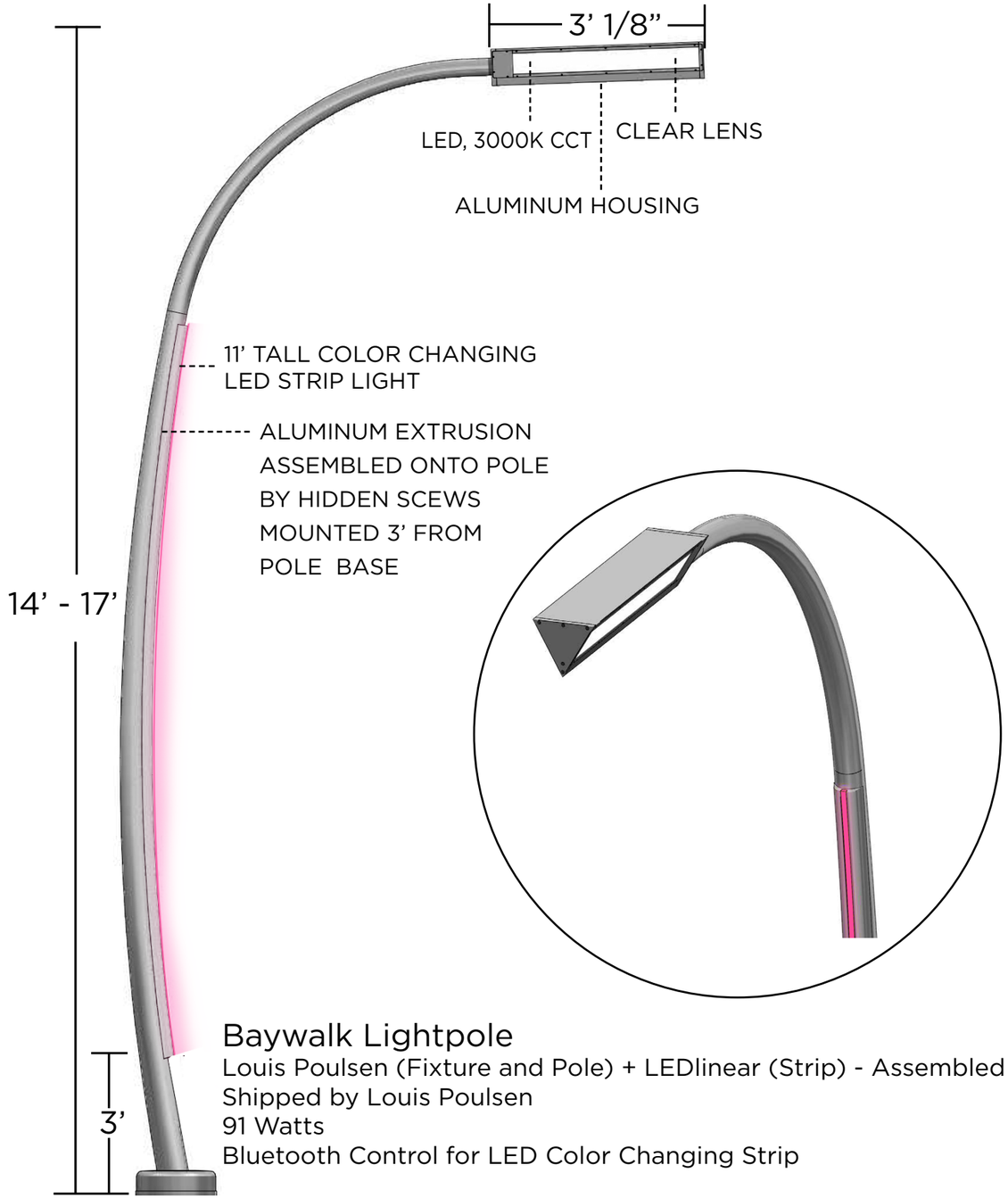

Baywalk Lightpole

Louis Poulsen (Fixture and Pole) + LEDlinear (Strip) - Assembled and Shipped by Louis Poulsen
91 Watts
Bluetooth Control for LED Color Changing Strip

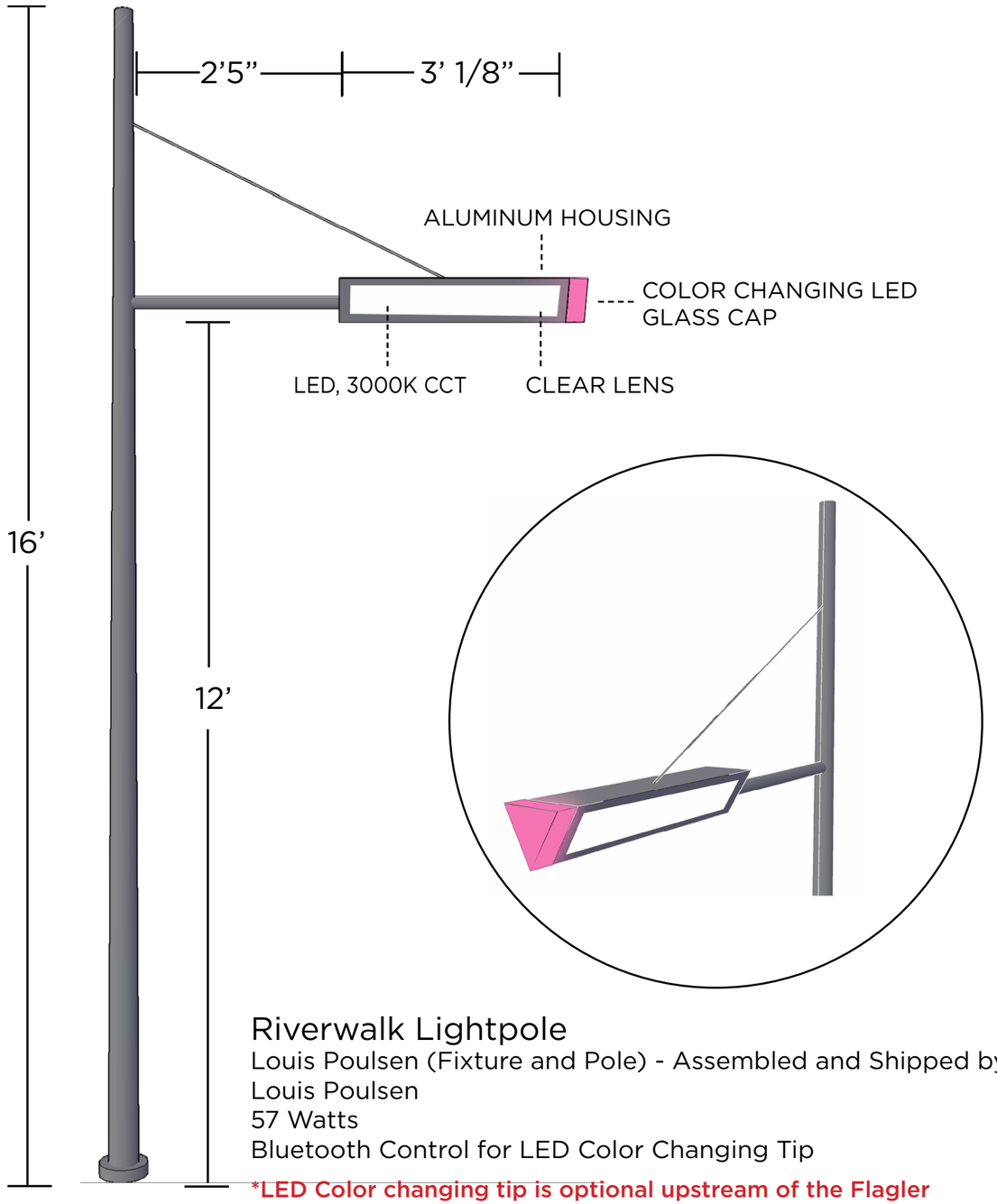

Riverwalk Lightpole

Louis Poulsen (Fixture and Pole) - Assembled and Shipped by Louis Poulsen
57 Watts
Bluetooth Control for LED Color Changing Tip

***LED Color changing tip is optional upstream of the Flagler street bridge on the north bank of the River and upstream of the Metro-rail bridge on the south bank of the river.**

NOTE: See appendix for full details

Lighting Standards (Ingrade Uplight or Solar Marker are **mandatory,** or approved equivalent)

Adjustable Ingrade Lighting
Erco - Tesis - 35181.023
LED, 7 Watts

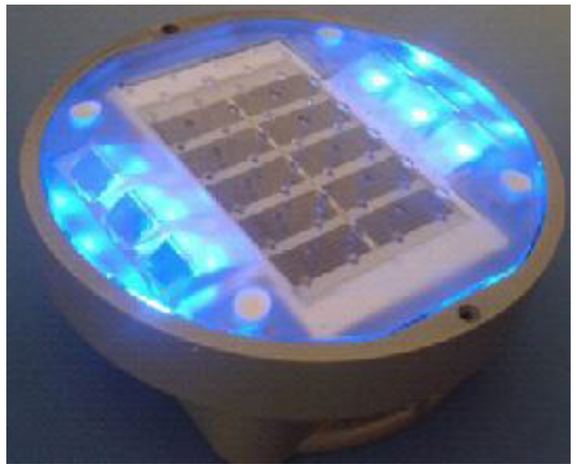

Solar Marker Lights
Solar Path - SolaTile Rigel 60
LED, 0 Watts
Photo Sensor

Tree Strapped Lights
BK Lighting - Denali on PM2 Tree Strap
LED, 12-27 Watts - Tree Dependant

Tree Uplighting
BK Lighting - Denali on Power Pipe
LED, 12-27 Watts - Tree Dependant

Underwater Fish Lights
Acclaim - Flex Tube SE RGB
LED Color Changing, 3 W Watts/ft.

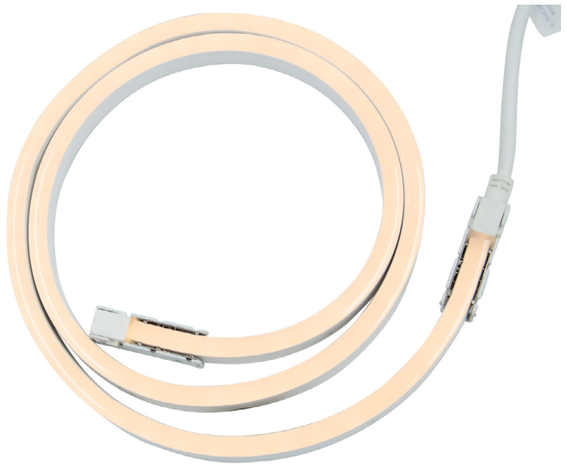

Underbench Lighting
Q-Tran - iQ67 Flex Mini White
LED, 3.3 Watts/ft.

Mangrove Trellis
Acolyte - Neonlyte
LED, 3 Watts/ft.

Bollard Lighting
Louis Poulsen - Waterfront
LED, 35 Watts

Refer to Materials Matrix and Appendix for Product Specifications

Layers of Light Applications (Additional Options)

Uplights - for sculptures or specialty trees and planting

Mangrove Trellis Lighting

Tree Lighting - uplights and downlights

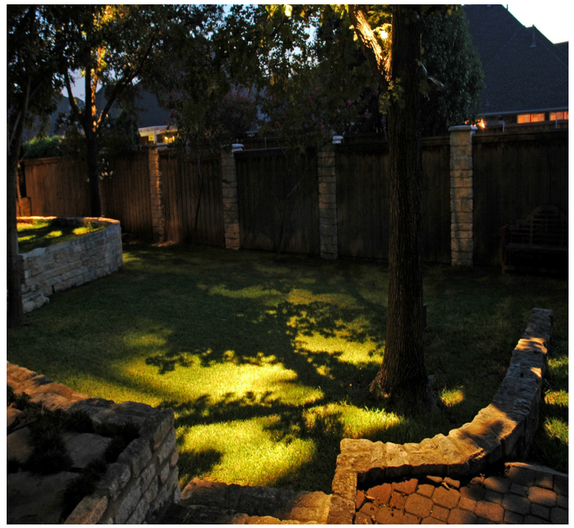

Moonlighting - downlights

Solar Markers - for the water's edge

Underwater Fish Lights - for specialty locations along the water's edge

Bench Lighting

Artistic Element Lighting

Refer to Materials Matrix and Appendix for Product Specifications

SITE FURNITURE

Site Furniture Background & Intent

Inspired by nature and the history of the waterfront, the family of furnishings is designed and selected to reflect both the character of the Miami waterfront on Biscayne Bay and Miami River, as well as Miami's cultural heritage. Mangrove patterns, reinforcing the waterfront brand and logo, are imprinted or carved into benches, signage and waste receptacles.

Sustainability, mainly in the form of durability and local availability, was the main criteria in creating the furniture palette. Materials include reclaimed wood, coral rock, concrete/shellstone paving, aluminum and recycled plastic that are appropriate for the Miami waterfront location.

Presently, the Miami Baywalk & Riverwalk includes a variety of components such as furniture, lighting, paving and planting that are not cohesive and do not promote harmony between properties. This manual provides recommendations for furnishings, lighting and paving elements as a basis to establish a unified spatial experience. The Miami waterfront has two distinct characters: the Bay, which is expansive and open to the sky, and the River, which is industrial and has a more intimate scale.

The family of furnishings for the Miami Baywalk & Riverwalk reflects these two characters. Inspired by the natural environment, the shipping industry, the Bay, the River and Miami's culture and identity, the family consists of seating, waste and recycling containers, bike racks, drinking fountains and others. The furnishings are made of a consistent palette of materials including reclaimed wood, shellstone or coral rock, concrete pavers with shell aggregates and metals that are appropriate to these Miami waterfront locations, reinforce site identity, and sense of place.

Goals:

- Reflect the maritime nature of the site
- Use appropriate and durable materials suitable for the marine environment including shellstone, metal and reclaimed wood (when allowed to weather naturally).
- Become an ornamental aspect of the Miami Baywalk & Riverwalk.
- Harmonize with the natural ecology of Miami.
- Provide comfortable opportunities for rest and relaxation.
- To facilitate diversity in usage.
- Withstand regular coastal winds and hurricane force winds.
- Reduce maintenance.
- Allow a free flow of pedestrian traffic and not pose a hazard to anyone. excessively.

GENERAL GUIDELINES

- Seating materials are made of stone, wood or metal "tubes" that do not conduct heat excessively.
- Seating is designed as movable, fixed, seat/retaining walls, or terraced steps.
- Seating design and selection to respond and enhance Bay and River's character.
- Locate long seating, such as seatwalls and steps in appropriate locations, e.g. spaces adjacent to the water, which would protect the seawall. (See spatial typologies for organization examples)
- Provide separate waste receptacles for garbage and recycling. Recycling should be separated between glass, paper, metal and plastic.
- Waste receptacles are selectd with rain covers and removable liners to conceal waste, and allow for easy maintenance.

BOLLARDS

- Bollards are to be placed at street ends to block access to pedestrian areas.
- Bollards are designed as square coral or shellstone blocks, between 18 to 24 inches height.
- "Movable" bollards shall be used where access of emergency vehicles is required.

STORAGE AND EQUIPMENT

- Outdoor storage of materials should be minimized and consolidated.
- Outdoor storage shall be screened from public view.
- Fire and mechanical equipment, if visible, should be uniform and consistent in color, size and location.
- Marina storage boxes shall be metal or recycled plastic with reclaimed wood veneers, to also function as "benches".

MAINTENANCE

- All metals shall have rust-inhibiting finishes, such as galvanization or powder coating, and be resistant to UV light, chipping, flaking, and salt spray.
- Anti-graffiti coating (either liquid-applied non- sacrificial surface sealer or liquid-applied sacrificial surface coating) shall be used to minimize maintenance, where necessary.
- Shade structures (i.e. pergolas/trellises), designed to withstand coastal winds and UV light, should be utilized to provide shaded seating in limited, selected locations.

Baywalk or Riverwalk - Standard Bench (**MANDATORY** or approved equivalent)

- Santa Cole Neoliviano Bench (or approved equivalent)
- Anodized Aluminum Finish for Supports Anodized Aluminum Finish for Supports
- Unfinished Exterior Wood available in Jarrah and Domestically Sourced Thermally Modified Ash (DSTMA) exterior wood.
- Exterior woods weather to a warm, pewter gray; no finish is applied so no maintenance is required.
- Three options: 24” chair, 69” bench w/ center arm, or 118” w/ center arm

69” bench w/ center arm

24” chair

118” bench w/ center arm

Refer to Materials Matrix and Appendix for Product Specifications

Standard Stone Bench (optional)

- Dominican Shellstone
- One way bench or two way bench
- Aluminum back with “mangrove root” detailing
- Customizable length and width
- Optional wood seat made out of reclaimed Greenheart wood
- River rock border

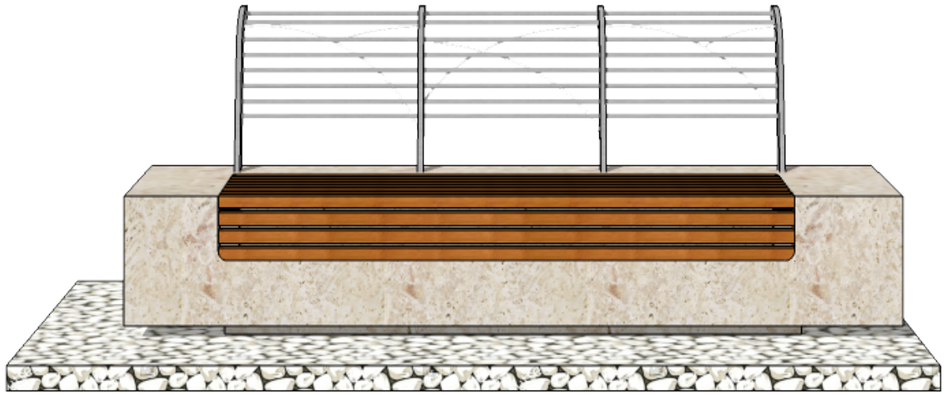

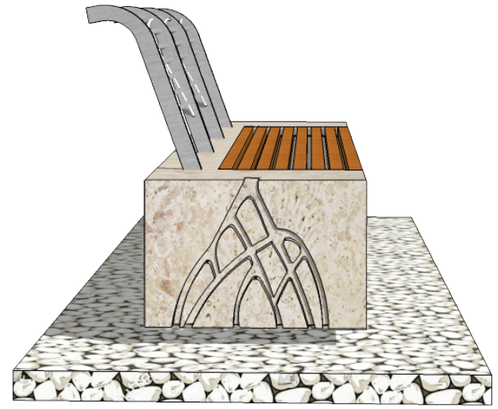

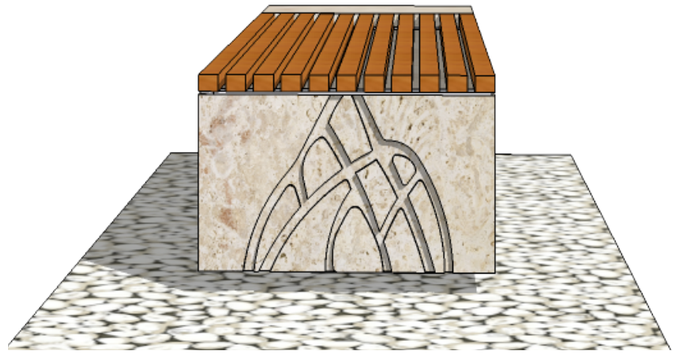

Refer to Materials Matrix and Appendix for Product Specifications

Stone Donut Bench (optional)

- Dominican Shellstone
- Circular bench wrapped around tree
- 10’ and 6’ radius options
- Full circle or half circle option
- Optional Thermory wood seat from Maglin (Ogden collection) or made out of reclaimed Greenheart wood.

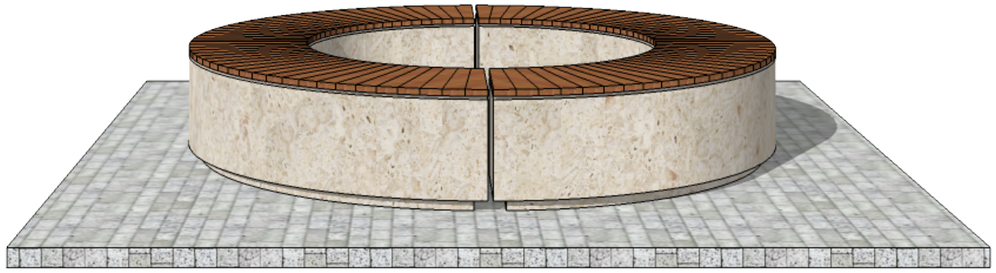

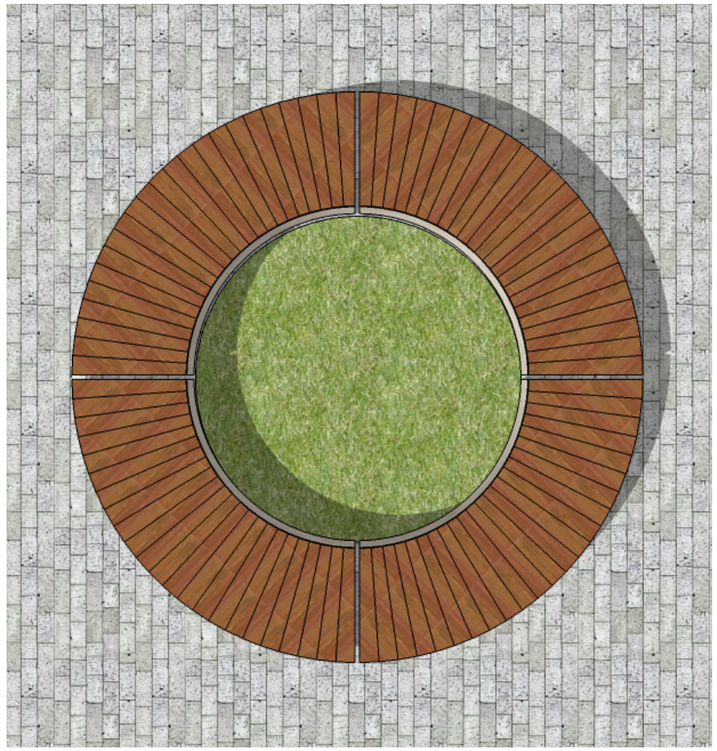

SCALE: 3/8" = 1'-0"

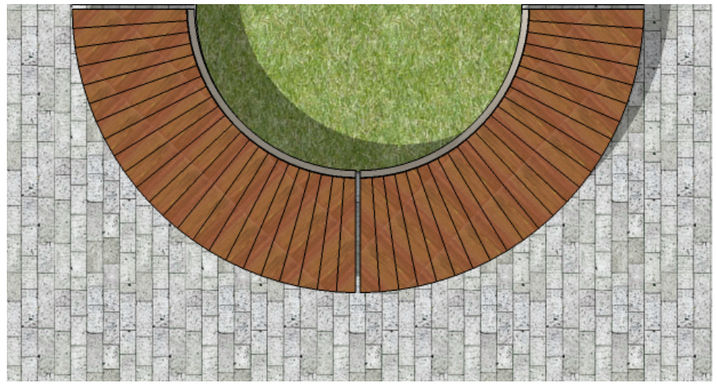

Refer to Materials Matrix and Appendix for Product Specifications

Additional / Movable Furniture (optional)

Trio Bench (or approved equivalent)
Forms + Surfaces
Center Arm available. Frame is solid cast aluminum with powdercoat finish. Ipé hardwood slats are 100% FSC with a natural oiled finish

Bench MLB870 (or approved equivalent)
Maglin
Center Arm, Marine grade or E-Coat Rust Proofing, Thermory wood or High density paper composite

Chill Lounge
Landscape Forms
Polyethylene
Daisy, Habanero, Fog and Otter

MCL720 Chaise Lounge
Maglin
Powdercoated steel or wood
Gunmetal

Chipman Chair
Landscape Forms
Marine grade Aluminium, 100% recyclable
Silver

Catena Chair
Landscape Forms
Marine grade Aluminium, 100% recyclable
Silver

Foro or Battery Collection Table
Maglin
Marine grade or E-Coat Rust Proofing, 100% recyclable
Gunmetal

Column Table
Forms+Surfaces
Stainless Steel,
Spun stainless steel,
Finish: Satin

Refer to Materials Matrix and Appendix for Product Specifications

Site Furnishings (trash receptacles are **mandatory,** all other accessories are recommended, but optional)

Lakeside Litter w/ side opening and mangrove pattern
Landscape Forms - Stainless steel

Flo Bike Rack
Landscape Forms
Marine grade Aluminium, 100% recyclable
Silver

Loop Bike Rack
Landscape Forms
Marine grade Aluminium, 100% recyclable
Silver

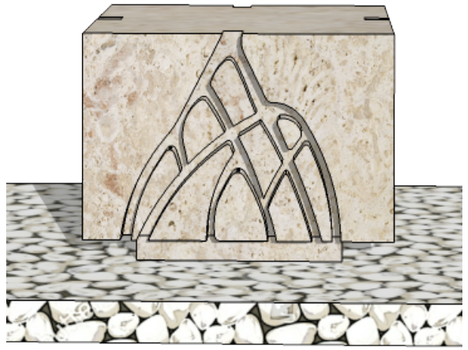

Bollard
Sutton Brick & Stone
Dominican Shellstone w/ mangrove pattern carving

Cube Bollard
Metalco
Stainless steel w/ mangrove pattern

440 SM & SMSS w/ pet fountain
Most Dependable Fountains
Powdercoated stainless steel

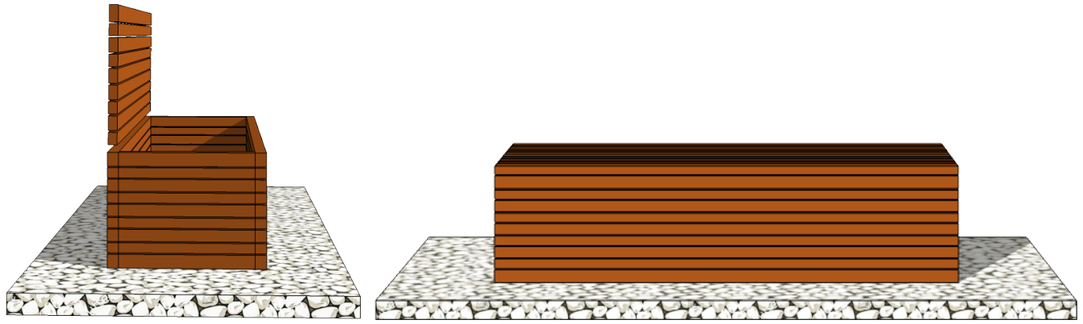

Marina Storage Container
Reclaimed wood box with cover for marina box storage and seating

Bollard Lighting
Louis Poulsen
Waterfront
LED, 35 Watts

Modern Dog Kit: Dog Waste Receptacle by Pet Pickups
Aluminum w/mangrove pattern

Refer to Materials Matrix and Appendix for Product Specifications

Additional Placemaking Elements (optional)

The Ephemeralist Ping Pong Table
POPP
Pink/Gray Aluminum

Game Table
The Urban Conga
Powdercoated steel

Cross Fitness*
Kampon
Hot-tip galvanized steel

Corocord Domes & Arches*
Kampon
Hot-tip galvanized steel

Cocowave Pendelum Swing*
Kampon
Hot-tip galvanized steel

Refer to Materials Matrix and Appendix for Product Specifications

Mangrove Trellis (optional placemaking element)

The mangrove evokes back to Miami's history, as it was the dominant force as Miami was ecologically formed. It might also be a call to our future, as its resilient nature can stabilize shorelines, clean water and provide marine habitat. Taking its iconic shape and utilizing it in number of forms, these placemaking options can provide: 1. a children's play area, 2. an adult outdoor lounge, 3. a shaded arbor, 4. a sculptural focal point.

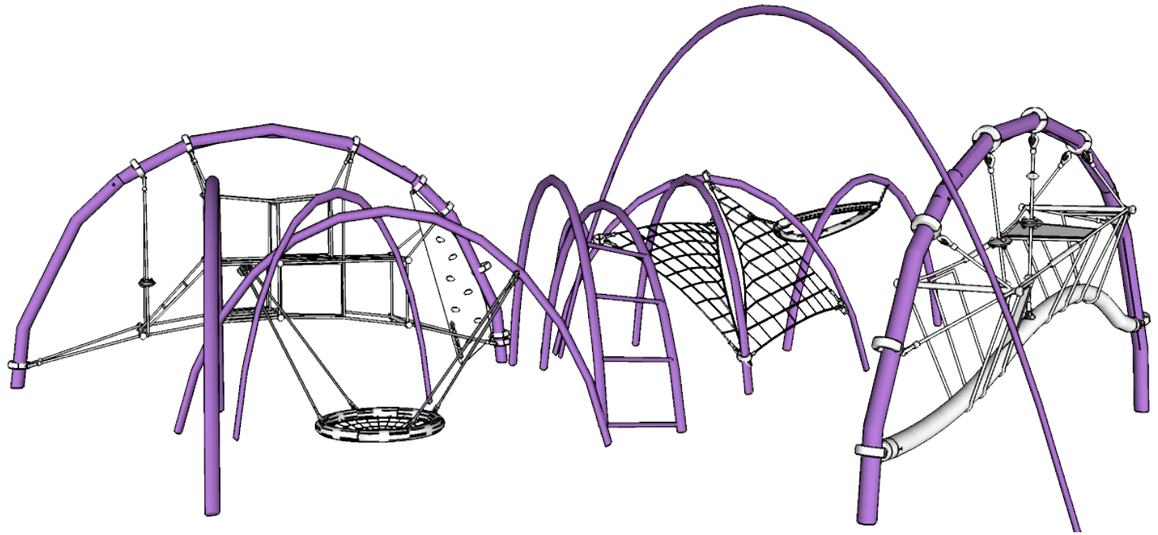

Playground by Kompan with playground surface

Arbor with aluminum vine lattice

Swing zone with hanging chairs and swings

Sculpture

PLANTING

Planting Background & Intent

The native climate in Miami is hot and humid in the summer with cooler temperatures and dryer air in the winter. Biscayne Bay's shoreline is a harsh environment that requires careful selection of plants and strict guidelines to ensure resiliency and facilitate maintenance, especially in light of hurricane force winds and storm surge events. Plant selection along Biscayne Bay must be able to handle full sun and be drought tolerant, as well as extremely salt and wind tolerant. While the selection of plant material along the Miami River - with brackish water moving upriver on the tide and fresher water pushing downriver after heavy rains - allows for a wider diversity of plant selection. The entire promenade is located along the shoreline of Biscayne Bay or Miami River. The soils throughout much of the area consist of fill materials due to the expansion of port operations, so replacement of existing soil with suitable planting soil mixtures is recommended.

These planting guidelines shall establish basic criteria with the purpose of creating a unifying and pedestrian-friendly plant environment along the entire Baywalk & Riverwalk.

Goals:

- **Provide at least 50% immediate shade coverage on the Baywalk & Riverwalk, with 100% shade coverage within 10 years.**
- Provide a consistent material selection to unify the Baywalk & Riverwalk visual/ perceptual experience and contributes to their coastal, ecological character.
- Connect to, enhance and showcase the natural ecology of Miami.
- Emphasize and establish hierarchy of spaces and district identity.
- Promote green infrastructure to mitigate flooding caused by sea-level rise, king tides and storm surge
- Increase stormwater infiltration and improve water quality
- Protect against storm surge protection.
- Promote the planting of shade trees to reduce Urban Heat Island Effect.
- Increase water quality with filtration.
- Reduce maintenance and minimize the use of fertilizers and pesticides.

Planting guidelines:

- The planting pallete shall consist of a minimum of 80% native, salt and drought-tolerant trees, palms, shrubs and groundcover.

- All planting selection and installation methods shall conform to Florida Friendly Landscape Guidelines.

- Native and/or naturalized plants shall be selected to increase biodiversity and creation of wildlife habitat, by attracting birds, butterflies, and other species.

- No planting material shall be specified that is classified as a Category 1 invasive species.

- Select plants that provide enhancement and protection to seawall and promote marine wildlife restoration, such as mangroves.

Increasing green space and planting native, salt-resistant, drought-tolerant, and in some cases, floodable vegetation, increases the sustainability and resiliency of the Miami Baywalk & Riverwalk and adjacent neighborhoods prone to flooding. LEFT: Maurice A. Ferre Park; RIGHT: Bayfront Park

- Plants shall not obstruct the path of pedestrian circulation.

- Large canopy shade trees and palm trees shall take priority over waterfront views between 10 and 40 feet above the seawall elevation.

Soil guidelines:
- For new plantings, planting soil shall be weed-free, and consist of 70% clean, coarse, sharp, Lake Wales Silica Sand (alternate: Ortona or FDOT #3 coarse silica sand) and 30% Everglades muck.

- Test soils in project areas in the project design phases and include soil improvement measures in project documents.

Tree and palm guidelines:
- Large trees shall be promoted to create shade for pedestrians and in seating/gathering areas.

- Trees shall be selected for their proven resiliency, especially in high wind flooding events.

- Plant trees and palms to establish a unified canopy for visual unity and pedestrian comfort.

- Large canopy trees shall be planted between 20 feet to 30 feet on center, maximum.

- Large palm trees shall be planted a maximum of 25 feet on center, and palm clusters can be specified in lieu of large trees. Both shall provide at minimum 50% shade canopy at installation with 100% within 10 years.

- Coconut Palm trees have been historically associated with Miami and may be used to define the continuity of the promenade, to avoid obscuring water views, and at some points of entry.

- Avoid trees with known pests and diseases that increase pesticide requirements.
- Provide adequate root zone space for trees in all planting areas and raised planters. Wherever possible, provide continuous or planting areas between trees to increase the root zone.

- Use Structural Cells under paving where large trees are specified in planters less than 100 square feet and further than 12' from adjacent, continuous green space areas.

- Install root barriers at pavement edges where large trees and palms are specified.

Groundcover guidelines:
- Use salt-tolerant turf, such as Paspalum 'Sea Dwarf', or Zoysia 'Empire', in areas intended for recreation and gathering.

- No planting material shall be used that is classified as an invasive species.

- Use grasses or other floodable groundcovers where adjacent to flood areas.

Maintenance guidelines:
- Select plants that can be maintained in their natural forms to reduce required trimming, energy use and green waste.

- Develop plantings with a hierarchy of maintenance needs where high use areas can provide more frequent maintenance

- Fertilize all plant material two times a year minimum for three (3) years minimum after installation.

- Apply mulch to 3" depth minimum at least three (3) times a year in all planting beds that are not fully covered by shrubs and groundcover.

- Select plants that require minimal fertilization, pruning and pest control.

- Select plants that are locally and readily available.

- All planting areas shall have low-water use/high efficiency irrigation systems, such as drip irrigation, low-trajectory irrigation nozzles, automatic shut-offs and equipped with soil and/or rain moisture sensors to regulate water use.

- Group plants by "hydro-zone" to reduce water use.

Minimum specifications:
- All plants furnished by the Landscape Contractor unless otherwise specified shall be Florida No.1 or better, and shall be specified in the current edition of Grades and Standards for Nursery Plants, Part 1 by the Florida Department of Agriculture and Consumer Services Division of the plant industry.

- All newly planted shrubs and groundcovers shall be guaranteed for six months from date of final acceptance. All newly planted trees and palms shall be guaranteed for one year from date of final acceptance.

- All trees, palms and standard shrub material to be staked in a good workmanlike manner. No nail staking permitted.

- All trees shall be fertilized at installation with "Agriform Pills", 21 gram size, with a 20-10-5 formulation, or approved equal, according to manufacturer's recommendations.

- All palms shall be fertilized at installation with Atlantic East Coast Fertilizer "Palm Special" (12-2-8) with slow-release sulphur-coated pellets, or approved equal.

- All other plants shall be fertilized at installation with a 12-4-8 time-release fertilizer (with slow release sulphur) according to manufacturer's recommendations.

- Cover all planting beds with a minimum of 3" layer of shredded Melaleuca, Grade B or eucalyptus mulch.

- No heavy equipment or materials shall be placed within the drip line of protected trees.
- At grade planters for medium-to large trees shall be a minimum of sixty (60) square feet, with a minimum dimension of five (5) feet.

- Planting shall be used where possible to screen parking garages, service, and loading areas from public view.

Large Canopy Trees (> 40’)

Gumbo Limbo
Bursera simaruba

Beauty Leaf
Calophyllum brasiliense

White Silk Floss
Chorisia insignis

Silk Floss Tree
Chorisia speciosa

Satin Leaf
Chrysophyllum oliviforme

Short leaf Fig, Wild Banyan
Ficus citrifolia

Wild Tamarind
Lysiloma latisiliquum

Red Bay
Persea borbonia

Jamaican Dogwood
Piscidia piscipula

Sand Live Oak
Quercus geminata

Large Canopy Trees (> 40’)

Live Oak
Quercus virginiana

Soapberry
Sapindus saponaria

Paradise Tree
Simarouba glauca

West Indies Mahogany
Swietenia mahagoni

Wild Tamarind
Tamarindus indica

Bald Cypress
Taxodium distichum

Tipu Tree, Rosewood
Tipuana tipu

Medium Sized Trees (15 – 30')

Sweet Acacia
Acacia farnesiana

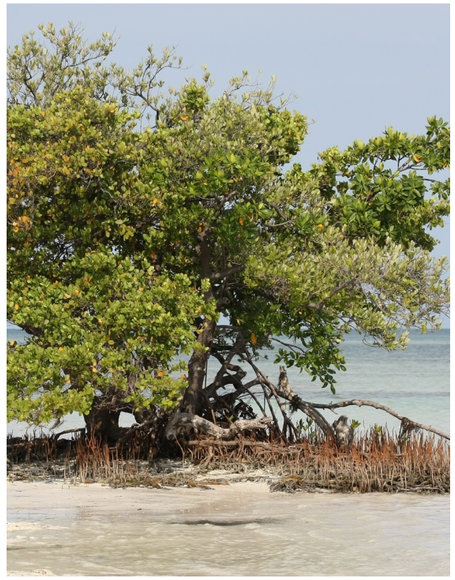

Black Mangrove
Avicennia germinans
** inundation-tolerant*

Verawood
Bulnesia arborea

Pitch Apple, Autograph Tree
Clusia rosea

Pigeon Plum
Coccoloba diversifolia

Sea Grape
Coccoloba uvifera

Green Buttonwood
Conocarpus **erecta**

Ironwood, Red Stopper
Eugenia confusa

Japanese Fern Tree
Filicium decipiens

Dahoon Holly
Ilex cassine

Medium Sized Trees (15 – 30')

Black Ironwood
Krugiodendron ferreum

White Mangrove
Laguncularia racemosa
** inundation-tolerant*

Simpson Stopper
Myrcianthes fragrans

Madagascar Olive
Noronhia emarginata

Madagascar Screw Pine
Pandanus utilis

Small Accent Trees (<20')

Mexican Palo Verde
Parkinsonia aculeata

Red Mangrove
Rhizophora mangle
** inundation-tolerant*

Jamaica Caper Tree
Capparis cynophallophora

Silver Buttonwood
Conocarpus erectus 'Sericeus'

Small Accent Trees (<20’)

Orange Geiger Tree
Cordia sebestena

White Stopper
Eugenia axillaris

Spanish Stopper
Eugenia foetida

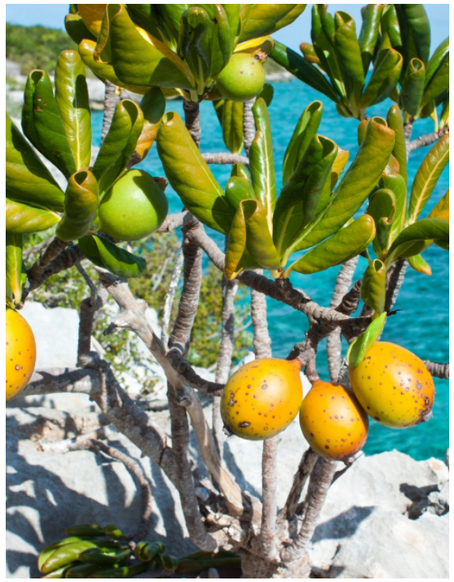

Seven Year Apple
Genipa clusiifolia

Lignum-vitae
Guaiacum officinale

Joewood
Jacquinia keyensis

White Frangipani
Plumeria alba

Frangipani
Plumeria rubra

Desert Cassia
Senna polyphylla

Sweet Acacia
Vachellia farnesiana

Palms

Paurotis Palm
Acoelorrhaphe wrightii

Christmas Palm, Manila Palm
Adonidia merrillii

Silver Bismarck Palm
Bismarkcia nobilis

Silver Palm
Coccothrinax argentata

Green Malayan Coconut Palm
Cocos nucifera 'Green Malayan'

Maypan Coconut Palm
Cocos nucifera 'Maypan'

Buccaneer Palm
Pseudophoenix sargentii

Florida Royal Palm
Roystonea elata

Cuban Royal Palm
Roystonea regia

Cabbage Palm
Sabal palmetto

Palms

Silver Saw Palmetto
Serenoa cinera

Saw Palmetto
Serenoa repens

Key Thatch Palm
Thrinax morrisii

Florida Thatch Palm
Thrinax parviflora

Thatch Palm
Thrinax radiata

Windmill Palm
Trachycarpus fortunei

Montgomery Palm
Veitchia montgomeryana

Large Shrubs (>6’)

Giant Leather Fern
Acrostichum danaeifolium

Century Plant
Agave americana

Spineless Century Plant
Agave attenuata

Desert Bird of Paradise
Caesalpinia gilliesii

Pride of Barbados
Caesalpinia pulcherrima

American Beautyberry
Callicarpa americana

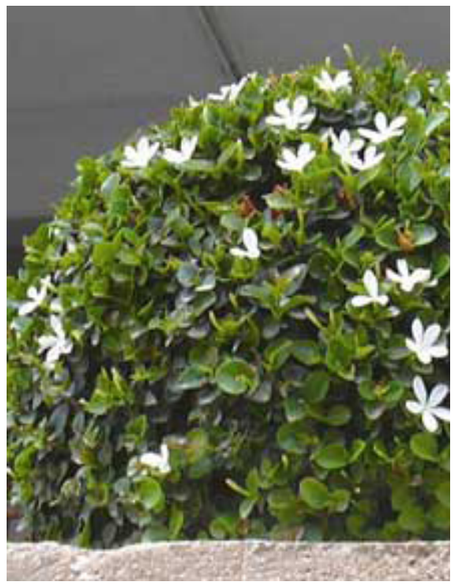

Natal Plum
Carissa grandiflora

Bahama Senna
Cassia bahamensis

Green Cocoplum
Chrysobalanus icaco/horizontalis

Red Tip Cocoplum
Chrysobalanus icaco ‘Red Tip’

Large Shrubs (>6’)

Small leaved Pitch Apple
Clusia guttifera

Sea Grape
Coccoloba uvifera

Green Buttonwood
Conocarpus erectus

Silver Buttonwood
Conocarpus erectus ‘Sericeus’

New Zealand Cabbage Palm
Cordyline australis

Queen Emma’s Spider Lily
Crinum asiaticum ‘Queen Emma’

Cherokee Bean
Erythrina herbacea

Thryallis
Galphimia gracilis

Firebush
Hamelia patens

Dwarf Firebush
Hamelia patens ‘Compacta’

Large Shrubs (>6’)

Tropical Hibiscus
Hibiscus rosa-sinensis

Oleander
Nerium oleander

Wild Coffee
Psychotria nervosa

Firecracker Plant
Russelia equisetiformis

Necklace Pod
Sophora tomentosa

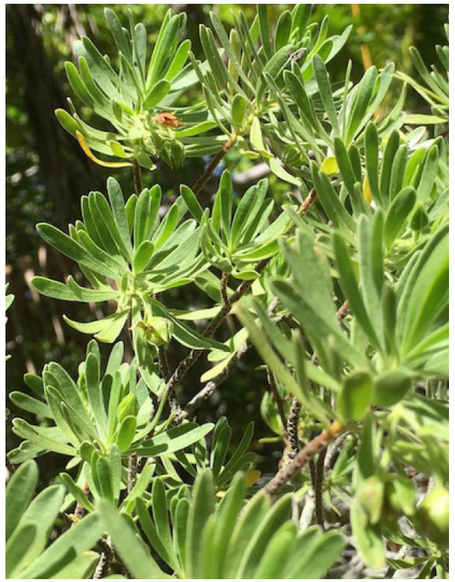

Bay Cedar
Suriana maritima

Spanish Bayonet
Yucca aloifolia

Adam’s Needle
Yucca smalliana

Small to Medium-sized Shrubs (3’ – 6’)

Sea Lavender
Argusia gnaphalodes

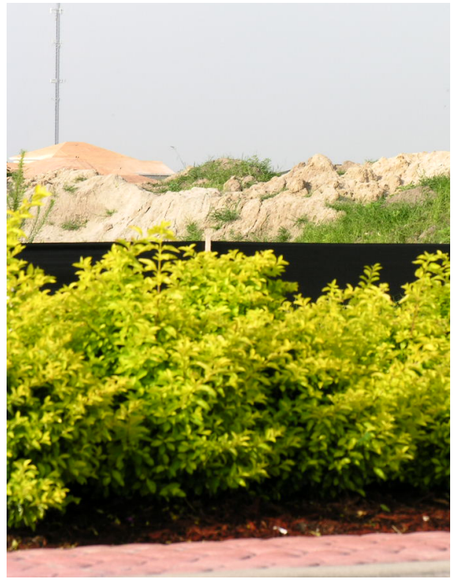

Golden Dewdrop
Duranta erecta ‘Goldmound’

Crown of Thorns
Euphorbia milii

Spider Lily
Hymenocallis latifolia

Sword Fern
Nephrolepis spp.

Royal Fern
Osmunda regalis

Indian Hawthorn
Rhaphiolepis indica

Tropical Sage
Salvia coccinea

Inkberry
Scaevola plumieri

Coontie
Zamia floridana

Groundcovers (<2')

Perennial Peanut
Arachis glabrata

Scarlet Weed
Asclepias curassavica

Foxtail Fern
Asparagus meyerii

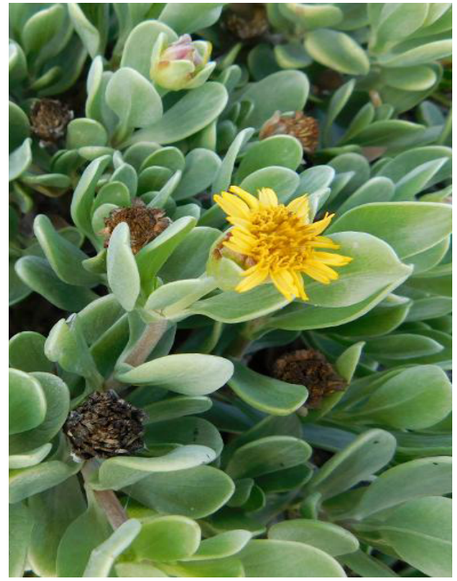

Sea Oxeye Daisy
Borrichia arborescens

Natal Plum
Carissa macrocarpa

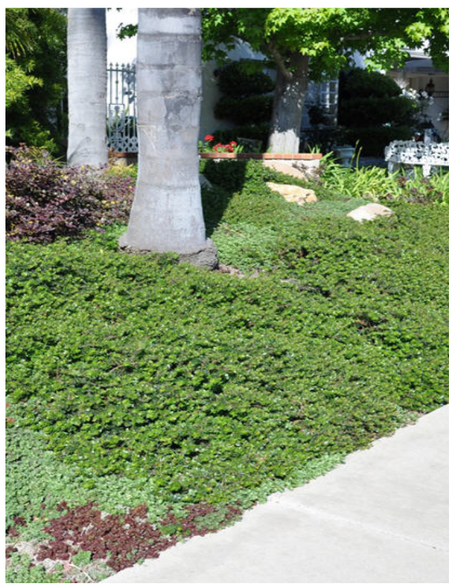

Dwarf Natal Plum
Carissa macrocarpa 'Nana'

White Striped Flax Lily
Dianella tasmanica 'Variegata'

Golden Creeper
Ernodia littoralis

Brazilian Dwarf Morning-Glory
Evolvulus glomeratus

Green Island Ficus
Ficus 'Green Island'

Groundcovers (<2’)

Creeping Ficus
Ficus pumila repens

Narrowleaf Yellowtop
Flaveria linearis

Blanket Flower
Gaillardia pulchella

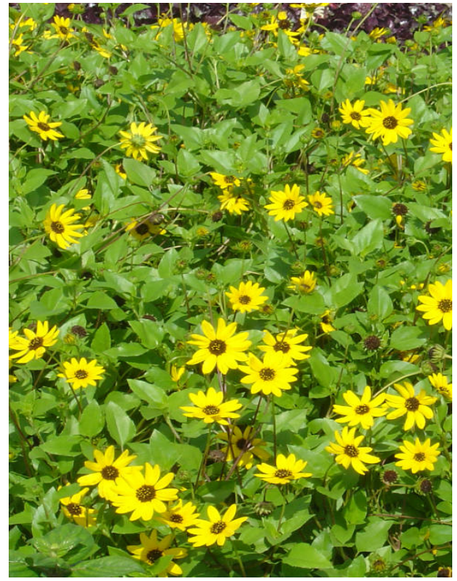

Beach Sunflower
Helianthus debilis

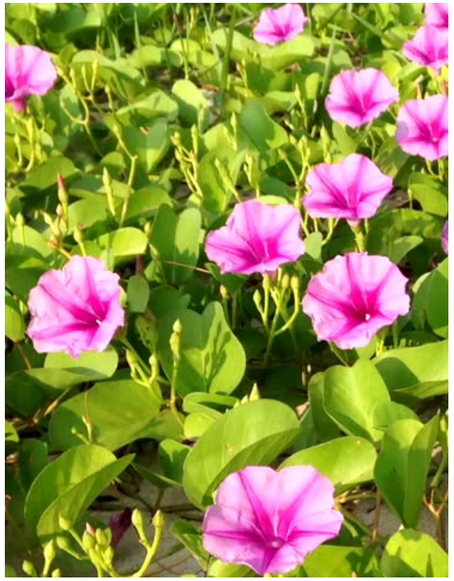

Railroad Vine
Ipomoea pes-caprae

Dune Marsh Elder
Iva imbricata

Pineland Lantana
Lantana depressa var. floridana

Gopher-Apple
Licania michauxii

Evergreen Giant Lilyturf
Liriope muscari ‘Evergreen Giant’

Wart Fern
Microsorum scolopendrium

Groundcovers (<2')

Sensitive Plant
Mimosa strigillosa

Sea Purslane
Portulaca spp.
** inundation-tolerant*

Star Sedum
Sedum sarmentosa

Sea Purslane
Sesuvium portulacastrum
** inundation-tolerant*

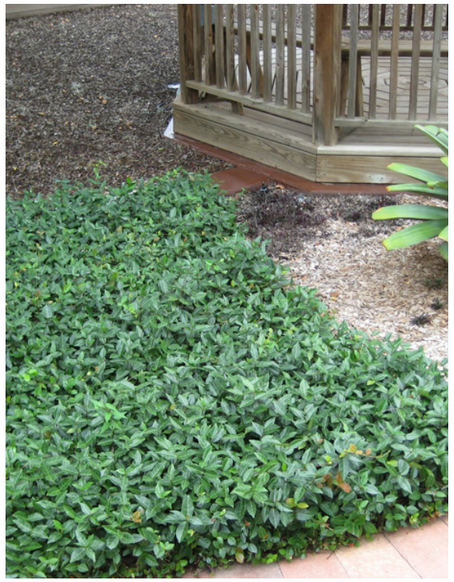

Asiatic Jasmine
Trachelospermum asiaticum

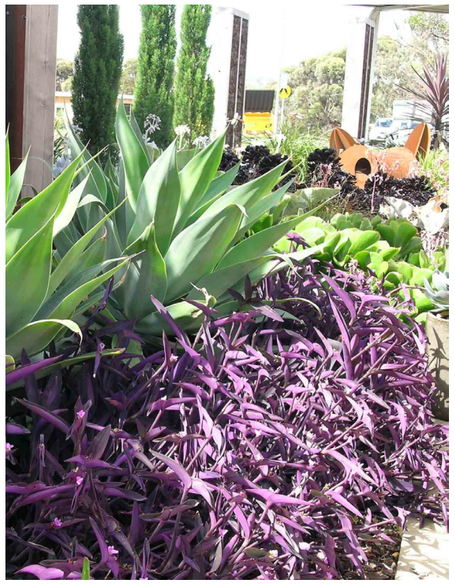

Purple Heart
Tradescantia pallida 'Purpurea'

Ornamental Grasses

Pink Muhly Grass
Muhlenbegia capillaris

Smooth Cordgrass
Spartina alterniflora
** inundation-tolerant*

Sand Cordgrass
Spartina bakeri
** inundation-tolerant*

Saltmeadow Cordgrass
Spartina patens
** inundation-tolerant*

Fakahatchee Grass
Tripsacum dactyloides

Florida Gama Grass
Tripsacum floridana

Sea Oats
Uniola paniculata

Vines

Boungainvillea, Paper Flower
Bougainvillea glabra

Trumpet Vine
Campsis radicans

Creeping Fig
Ficus pumila

Maypop, Passionflower
Passiflora incarnata

Mexican Flame Vine
Senecio confusus

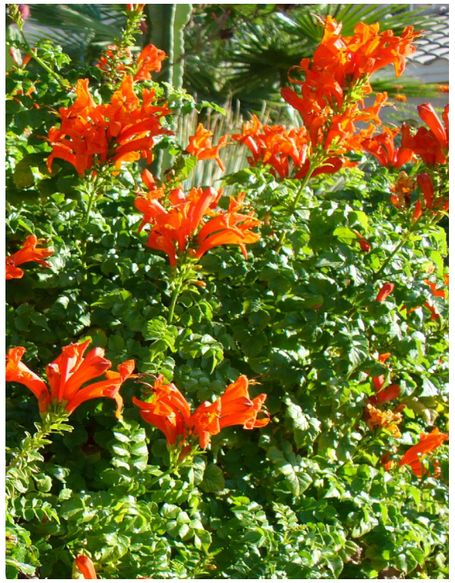

Cape honeysuckle
Tecomaria capensis

Turfgrasses

Bermuda Grass
Cynodon dactylon

Seashore Paspalum
Paspalum distichum
** inundation-tolerant*

St. Augustine Grass
Stenotaphrum secundatum

Zoysia Grass
Zoysia japonica 'Empire'

Planting

Botanical Name	Common Name	Size and Spacing Height x Width	Sun/Shade Light Preference	Aerosol Salt Spray Tolerance	Baywalk, Riverwalk, or Both	Florida Native	Minimum Size Requirements
LARGE CANOPY TREES							
Bursera simaruba	Gumbo Limbo / Tourist Tree	24-50' x 20-50'	FS to PS	High	Both	✓	12'-14' Ht. x 8'-9' Sprd., B&B, 3' CT, 3.5" Cal
Calophyllum brasiliense	Beauty Leaf	30-40' x 40-50'	FS to PS	High	Both		15' Ht. x 8' Sprd./ Full/ B&B Approved Source
Chorisia insignis	White Silk Floss	35-50' x 40-55'	FS	Med to Low	Riverwalk		12' Ht. x 6' Sprd./ 3" Cal/ B&B
Chorisia speciosa	Silk Floss Tree	35-50' x 40-55'	FS	Med to Low	Riverwalk		12' Ht. x 6' Sprd./ 3" Cal/ B&B
Chrysophyllum oliviforme	Satin Leaf	35-45'' x 18-25'	FS to PS	Moderate	Both	✓	10' Ht. x 6' Spr./ B&B/ Full
Ficus citrifolia	Short leaf Fig, Wild Banyan	40-70' x 30-40'	FS	Med to Low	Riverwalk	✓	12' Ht. x 6' Sprd.
Lysiloma latisiliquum	Wild Tamarind	30-60' x 30-50'	FS to PS	High	Both	✓	12' Ht. x 6' Sprd./ 3" Cal min./ B&B/ Full
Persea borbonia	Red Bay	35-50' x 30-50'	FS to PS	Med to High	Both	✓	12' Ht. x 5' Sprd.
Piscidia piscipula	Jamaican Dogwood	35-50' x 30-50'	FS to PS	High	Both	✓	10'-12' Ht. x 7'-8' Sprd./ B&B
Quercus geminata	Sand Live Oak	60-80' x 60-120'	FS to PS	High	Both	✓	14' Ht. x 7' Sprd./6" Cal/Sgl. Str. trunk/Full/B&B
Quercus virginiana	Live Oak	60-80' x 60-120'	FS to PS	High	Both	✓	14' Ht. x 7' Sprd./6" Cal/Sgl. Str. trunk/Full/B&B
Sapindus saponaria	Florida Soapberry	35-40' x 25-35'	FS	High	Both	✓	10'-12' Ht. x 6'-7' Sprd./ B&B
Simarouba glauca	Paradise Tree	40-50' x 25-35'	FS to PS	Med to High	Both	✓	10'-12' Ht. x 6'-7' Sprd./ B&B
Swietenia mahagoni	West Indies Mahogany	40-60' x 40-60'	FS to PS	High	Both	✓	12' Ht. X 6' Spr. / B&B/ Single/ Straight Trunk/ Full
Tamarindus indica	Wild Tamarind	40-65' x 40-50'	FS	Med to Low	Riverwalk		12' Ht. x 6' Sprd./ Full/ B&B
Taxodium distichum	Bald Cypress	60-80' x 25-35'	FS to PS	Medium	Both	✓	14' Ht. x 7' Sprd./6" Cal/Sgl. Str. trunk/Full/B&B
Tipuana tipu	Tipu Tree, Rosewood	25-50' x 25-50'	FS	Med to Low	Riverwalk		10'-12' Ht. x 6'-7' Sprd./ B&B
MEDIUM-SIZED TREES							
Acacia farnesiana	Sweet Acacia	15-25' x 15-25'	FS	Med to High	Riverwalk	✓	8' Ht. x 4' Sprd./ B&B
Avicennia germinans	Black Mangrove	25-30' x 40-60'	FS	High	Baywalk	✓	4' Ht. x 2' Sprd./ 7 Gal/ Full
Bulnesia arborea	Verawood	25-30' x 25-40'	FS	Moderate	Riverwalk		8' Ht. x 4' Sprd./ B&B/ Full
Clusia rosea	Pitch Apple, Autograph Tree	25-30' x 15-25'	FS to PS	High	Both	✓	8' Ht. x 4' Sprd./ Full/ B&B
Coccoloba diversifolia	Pigeon Plum	25-40' x 20-35'	FS to PS	High	Both	✓	8' Ht. x 4' Sprd./Min 2" Cal/ Full
Coccoloba uvifera	Sea Grape	25-45' x 20-30'	FS to PS	High	Both	✓	8' Ht. x 4' Sprd./Min 2" Cal/ Full
Conocarpus erecta	Green Buttonwood	30-45' x 20-30'	FS	High	Both	✓	10' Ht. x 6' Sprd./ B&B/ Standard/ Tree Form
Eugenia confusa	Ironwood, Red Stopper	15-35' x 15-25'	FS to PS	Moderate	Riverwalk		10' Ht. x 6' Sprd./ B&B/ Standard/ Tree Form
Filicium decipiens	Japanese Fern Tree	20-25' x 20-25'	FS to PS	Moderate	Riverwalk		10' Ht. x 6' Sprd./ 25 Gal/ Heavy/ Full
Ilex cassine	Dahoon Holly	20-30' x 8-12'	FS to PS	Moderate	Riverwalk	✓	10' Ht. x 6' Sprd./ B&B/ Standard/ Tree Form
Krugiodendron ferreum	Black Ironwood	20-30' x 15-25'	FS to PS	Moderate	Riverwalk	✓	10' Ht. x 6' Sprd./ 25 Gal/ Heavy/ Full
Laguncularia racemosa	White Mangrove	35-50' x 40-60'	FS	High	Baywalk	✓	4' Ht. x 2' Sprd./ 7 Gal/ Full
Myrcianthes fragrans	Simpson Stopper	20-30' x 15-25'	FS to PS	High	Both	✓	6' Ht. x 3' Sprd./ 25 Gal./ Standard/ Tree Form
Noronhia emarginata	Madagascar Olive	20-25' x 15-20'	FS to PS	High	Both		10' Ht. x 6' Sprd./ 25 Gal/ Heavy/ Full
Pandanus utilis	Madagascar Screw Pine	20-30' x 12-20'	FS to PS	High	Both		9-10' / 65 Gal
Parkinsonia aculeata	Mexican Palo Verde	15-20' x 20-25'	FS	High	Both	✓	12' Ht. x 6' Sprd.
Rhizophora mangle	Red Mangrove	25-30' x 40-60'	FS	High	Baywalk	✓	4' Ht. x 2' Sprd./ 7 Gal/ Full

Denotes a plant that has a high tolerance for aerosol salt spray

Planting

Botanical Name	Common Name	Size and Spacing Height x Width	Sun/Shade Light Preference	Aerosol Salt Spray Tolerance	Baywalk, Riverwalk, or Both	Florida Native	Minimum Size Requirements
SMALL ACCENT TREES							
Capparis cynophallophora	Jamaica Caper Tree	6-15' x 8-12'	FS to PS	Moderate	Riverwalk	✓	10' Ht. x 6' Sprd./ B&B/ Standard/ Tree Form
Conocarpus erectus 'Sericeus'	Silver Buttonwood	15-20' x 15-20'	FS	High	Both	✓	10' Ht. x 6' Sprd./ B&B/ Standard/ Tree Form
Cordia sebestena	Orange Geiger Tree	15-25' x 8-15'	FS	High	Both	✓	8' Ht. x 4' Sprd./ B&B
Eugenia axillaris	White Stopper	15-25' x 8-15'	FS to PS	Moderate	Riverwalk	✓	8' Ht. x 4' Sprd./ B&B
Eugenia foetida	Spanish Stopper	12-20' x 15-20'	FS to PS	High	Both	✓	10' Ht. x 6' Sprd./ B&B/ Standard/ Tree Form
Genipa clusiifolia	Seven Year Apple	10-20' x 15'	FS to PS	Moderate	Riverwalk	✓	8' Ht. x 4' Sprd./ B&B
Guaiacum officinale	Lignum-vitae	10-30' x 8-12'	FS to PS	High	Both	✓	5'-6' Ht. x 4' Sprd./ 15 Gal
Jacquinia keyensis	Joewood	8-10' x 8-12'	FS to PS	High	Both	✓	5'-6' Ht. x 4' Sprd./ 15 Gal
Plumeria alba	White Frangipani	20-25' x 20-25'	FS to PS	Moderate	Riverwalk		10' Ht. x 5' Sprd.
Plumeria rubra	Frangipani	20-25' x 20-25'	FS to PS	High	Both		10' Ht. x 5' Sprd.
Senna polyphylla	Desert Cassia	8-10' x 8-12'	FS	Moderate	Riverwalk		6' Ht. x 3' Sprd./ 20 Gal./ Full/ Standard
Vachellia farnesiana	Sweet Acacia	15-25' x 15-25'	FS	Moderate	Riverwalk		8' Ht. x 4' Sprd./ B&B
PALMS							
Acoelorrhaphe wrightii	Paurotis Palm	15-25' x 10-15'	Sun or Shade	High	Both	✓	12-15' Ht. / B&B/ 7 stem min/ Full to ground
Adonidia merrillii	Christmas Palm, Manila Palm	12-25' x 5-8'	FS to PS	Med to High	Both		8' O.A./ Full hd./ FG
Bismarkcia nobilis	Silver Bismarck Palm	25-60' x 10-15'	FS to PS	Med to High	Both		8' O.A./ Full hd./ 45 Gal.
Coccothrinax argentata	Silver Palm	6-15' x 6-7'	Sun or Shade	High	Both	✓	8' O.A. Ht./ 15 Gal
Cocos nucifera 'Green Malayan'	Green Malayan Coconut Palm	50-75' x 15-25'	FS	High	Both		10" Cal/ 15 Fronds min./ B&B/ Heavy
Cocos nucifera 'Maypan'	Maypan Coconut Palm	50-75' x 15-25'	FS	High	Both		15 Fronds min./ B&B/ Heavy
Pseudophoenix sargentii	Buccaneer Palm	10-15' x 6-10'	Sun or Shade	High	Both	✓	8' O.A./ Full hd./ FG
Roystonea elata	Florida Royal Palm	50-75' x 15-25'	FS	Med to High	Both	✓	B&B/ Heavy/ No Scars/ Matched/ App. Sr.
Roystonea regia	Cuban Royal Palm	50-75' x 15-25'	FS	Med to High	Both	✓	B&B/ Heavy/ No Scars/ Matched/ App. Sr.
Sabal palmetto	Cabbage Palm	25-50' x 10-15'	FS to PS	High	Both	✓	Avg. 20' O.A./ Hurr. cut
Serenoa cinera	Silver Saw Palmetto	5-10' x 4-10'	Sun to FShade	Med to High	Both	✓	24" Ht. x 30" Sprd./ 3 Gal/ 24" O.C./ Full
Serenoa repens	Saw Palmetto	5-10' x 4-10'	Sun to FShade	Med to High	Both	✓	24" Ht. x 30" Sprd./ 3 Gal/ 24" O.C./ Full
Thrinax morrisii	Key Thatch Palm	15-25' x 6-10'	FS to PS	Moderate	Riverwalk	✓	4' C.T./ Full hd./ FG
Thrinax parviflora	Florida Thatch Palm	15-25' x 6-10'	FS	Moderate	Riverwalk	✓	4' C.T./ Full hd./ FG
Thrinax radiata	Thatch Palm	15-25' x 6-10'	FS to PS	Moderate	Riverwalk	✓	4' C.T./ Full hd./ FG
Trachycarpus fortunei	Windmill Palm	10-25' x 8-10'	Sun to FShade	Moderate	Riverwalk		8' O.A./ Full hd./ FG
Veitchia montgomeryana	Montgomery Palm	25-35' x 10-15'	Sun to FShade	Moderate	Riverwalk		8' C.T./ 18" Cal min./ B&B
LARGE SHRUBS							
Acrostichum danaeifolium	Giant Leather Fern	6-12' x 8-14'	FS to PS	Moderate	Riverwalk	✓	30" Ht./ 3 Gal/ 36" O.C.
Agave americana	Century Plant	6-8' x 6-10'	FS to PS	Moderate	Riverwalk	✓	3' O.A./ 7 Gal
Agave attenuata	Spineless Century Plant	2-3' x 3-4'	FS to PS	Moderate	Riverwalk		3' O.A./ 7 Gal
Caesalpinia gilliesii	Desert Bird of Paradise	7-10' x 7-10'	FS to PS	Moderate	Riverwalk		3' O.A./ 7 Gal
Caesalpinia pulcherrima	Pride of Barbados	8-12' x 10-12'	FS to PS	Moderate	Riverwalk		3' O.A./ 7 Gal
Callicarpa americana	American Beautyberry	3-8' x 4-8'	FS to PS	Med to Low	Riverwalk	✓	3' O.A./ 7 Gal
Carissa grandiflora	Natal Plum	6-10' x 4-10'	FS to PS	High	Both		18" O.A./ 3 Gal/ 24" O.C.

Denotes a plant that has a high tolerance for aerosol salt spray

Planting

Botanical Name	Common Name	Size and Spacing Height x Width	Sun/Shade Light Preference	Aerosol Salt Spray Tolerance	Baywalk, Riverwalk, or Both	Florida Native	Minimum Size Requirements
LARGE SHRUBS (continued)							
Cassia bahamensis	Bahama Senna	3-9' x 6-10'	FS to PS	Moderate	Riverwalk	✓	3' O.A./ 7 Gal
Chrysobalanus icaco	Green Cocoplum	6-20' x 4-10'	FS to PS	High	Both	✓	18" O.A./ 3 Gal/ 24" O.C.
Chrysobalanus icaco 'Red Tip'	Red Tip Cocoplum	6-15' x 4-6'	FS to PS	High	Both	✓	18" O.A./ 3 Gal/ 24" O.C.
Clusia guttifera	Small leaved Pitch Apple	6-20' x 4-10'	FS to PS	High	Both	✓	3' O.A./ 7 Gal
Clusia rosea	Pitch Apple	6-20' x 4-10'	FS to PS	High	Both	✓	3' O.A./ 7 Gal
Coccoloba uvifera	Sea Grape	25-45' x 20-30'	FS to PS	High	Baywalk	✓	2' O.A./ 3 Gal/ 36" O.C./ Full/ Shrub Form
Conocarpus erectus	Green Buttonwood	6-20' x 8-20'	FS to PS	High	Both	✓	2' O.A./ 3 Gal/ 36" O.C./ Full/ Shrub Form
Conocarpus erectus 'Sericeus'	Silver Buttonwood	6-12' x 4-10'	FS to PS	High	Both	✓	24" Ht. x 18" Spr./3 Gal/ 24" O.C./Full
Cordyline australis	New Zealand Cabbage Palm	6-15' x 3-6'	FS to PS	Med to High	Both		3' O.A./ 7 Gal
Crinum asiaticum 'Queen Emma'	Queen Emma's Spider Lily	3-6' x 3-5'	FS to PS	Med to Low	Riverwalk		3' Ht. x 3' Sprd./ 3 hd. Min / 7 Gal/ As Shown
Erythrina herbacea	Cherokee Bean, Coral Bean	5-15' x 8-12'	FS to PS	High	Both	✓	30" Ht. x 24" Sprd./ 3 Gal/ 24" O.C.
Galphimia gracilis	Thryallis	6-10' x 6-10'	FS to PS	Low	Riverwalk		24" O.A./ 3 Gal/ 30" O.C./ Full
Hamelia patens	Firebush	6-12' x 5-8'	FS to PS	Low	Riverwalk	✓	24" O.A./ 3 Gal/ 36" O.C./ Full
Hamelia patens 'Compacta'	Dwarf Firebush	4-8' x 4-6'	FS to PS	Low	Riverwalk	✓	24" O.A./ 3 Gal/ 36" O.C./ Full
Hibiscus rosa-sinensis	Tropical Hibiscus, Rose Mallow	4-10' x 5-8'	FS to PS	Moderate	Riverwalk	✓	24" O.A./ 3 Gal/ 30" O.C./ Full
Nerium oleander	Oleander	10-18' x 10-15'	FS to PS	Med to High	Both		24" O.A./ 3 Gal/ 36" O.C./ Full
Plumbago auriculata	Cape Plumbago	6-10' x 8-10'	FS to PS	Med to High	Both		24" O.A./ 3 Gal/ 36" O.C./ Full
Psychotria nervosa	Wild Coffee	4-10' x 4-8'	Sun to FShade	Med to Low	Riverwalk	✓	30" Ht. x 24" Sprd./ 3 Gal/ 24" O.C.
Russelia equisetiformis	Firecracker Plant	4-5' x 4-5'	FS to PS	Moderate	Riverwalk		24" O.A./ 3 Gal/ 36" O.C./ Full
Sophora tomentosa	Necklance Pod	6-10' x 8-12'	Full Sun	Moderate	Riverwalk	✓	18" O.A./ 3 Gal. / 24" O.C. / Full
Suriana maritima	Bay Cedar	5-20' x 5-8'	Full Sun	Med to High	Baywalk	✓	18" O.A./ 3 Gal. / 24" O.C. / Full
Yucca aloifolia	Spanish Bayonet	10-15' x 3-5'	FS to PS	High	Both	✓	3' O.A./ 7 Gal/ 36" O.C.
Yucca smalliana	Adam's Needle	6-8' x 3-5'	FS to PS	Moderate	Riverwalk	✓	3' O.A./ 7 Gal/ 36" O.C.
SMALL TO MEDIUM-SIZED SHRUBS							
Duranta erecta 'Goldmound'	Golden Dew Drop	2-5' x 2-3'	FS to PS	Med to Low	Riverwalk	✓	18" O.A./ 3 Gal/ 24" O.C.
Euphorbia milii	Crown of Thorns	2-3' x 1-2'	Full Sun	High	Both		8"-12" O.A./ 1 Gal/ 12" O.C.
Heliotropium gnaphalodes	Sea Lavender	3-5' x 3-6'	Full Sun	High	Baywalk	✓	18" O.A./ 3 Gal/ 36" O.C./ Full
Hymenocallis latifolia	Spider Lily	1-3' x 3-5'	FS to PS	Med to High	Both	✓	3' O.A./ 7 Gal/ 36" O.C.
Nephrolepis spp.	Sword Fern	1-4' x spreads indefinite	Sun to FShade	Med to Low	Riverwalk	✓	18" O.A./ 3 Gal/ 24" O.C.
Osmunda regalis	Royal Fern	2-3' x 2-3'	Part to Full Shade	Low	Riverwalk	✓	18" O.A./ 3 Gal/ 24" O.C.
Rhaphiolepis indica	Indian Hawthorn	3-7' x 6-10'	FS to PS	Moderate	Both		18" O.A./ 3 Gal/ 24" O.C.
Salvia coccinea	Tropical Sage	2-4' x 1-2'	FS to PS	Med to High	Both	✓	18" O.A./ 3 Gal/ 24" O.C.
Scaevola plumieri	Inkberry	2-3' x 3-8'	FS to PS	High	Baywalk	✓	24" O.A./ 3 Gal/ 36" O.C./ Full
Zamia furfuracea	Cardboard Palm	2-5' x 5-8'	FS to PS	Med to High	Both		3' O.A./ 7 Gal/ 36" O.C.
Zamia integrifolia	Coontie	2-5' x 5-8'	FS to PS	Med to High	Both	✓	3' O.A./ 7 Gal/ 36" O.C.

Denotes a plant that has a high tolerance for aerosol salt spray

Planting

Botanical Name	Common Name	Size and Spacing Height x Width	Sun/Shade Light Preference	Aerosol Salt Spray Tolerance	Baywalk, Riverwalk, or Both	Florida Native	Minimum Size Requirements
GROUNDCOVERS							
Arachis glabrata	Perrenial Peanut	6" x spreads indefinite	FS to PS	Med to High	Both	✓	12" O.A. /1 Gal/18" O.C.
Asclepias curassavica	Scarlet Weed	1-2' x 1-2'	Full Sun	Med to Low	Riverwalk	✓	12" O.A. /1 Gal/18" O.C.
Asparagus meyerii	Foxtail Fern	1-2' x 1-2'	Sun to FShade	Moderate	Both		24" Ht. x 24" Sprd./ 3 Gal/ 24" O.C.
Aspidistra elatior	Cast Iron Plant	1-2' x 1-2'	Sun to FShade	Low	Riverwalk		24" Ht. x 24" Sprd./ 3 Gal/ 24" O.C.
Borrichia arborescens	Silver Sea Oxeye Daisy	2-4' x 2-3'	Full Sun	High	Baywalk	✓	2' Ht. / 3 Gal. / 24" O.C./ Full
Carissa macrocarpa	Natal Plum	1-2' x 4-8'	FS to PS	Med to High	Both		24" Ht. x 24" Sprd./ 3 Gal/ 24" O.C.
Carissa macrocarpa 'Nana'	Dwarf Natal Plum	1-2' x 1-2'	Sun to FShade	High	Both	✓	18" Ht./ 3 Gal/ 24" O.C./ Full
Dianella tasmanica 'Variegata'	White Striped Flax Lily	2-3' x 1-2'	FS to PS	Med to High	Both		30" ht x 30" spr/3 gal/ 24" O.C./Full
Ernodea littoralis	Golden Creeper	1-3' x spreads indefinite	Full Sun	Med to High	Both	✓	12" O.A. /1 Gal/15" O.C.
Evolvulus glomeratus	Brazilian Dwarf Morning-Glory	1-2' x 1-2'	Full Sun	Moderate	Both		18" Ht./ 3 Gal/ 24" O.C./ Full
Ficus 'Green Island'	Green Island Ficus	2-4' x 3-5'	FS to PS	Med to High	Both	✓	30" ht x 30" spr/3 gal/ 24" O.C./Full
Ficus pumila	Creeping Ficus	6" x spreads indefinite	FS to PS	Moderate	Both		24" OA/ 3 Gal./ 24" O.C.
Flaveria linearis	Narrow Yellowtop	2-3' x 3-4'	Full Sun	High	Baywalk	✓	12" O.A. /1 Gal/15" O.C.
Gaillardia pulchella	Blanketflower	1-2' x 2-3'	Full Sun	High	Both	✓	12" O.A. /1 Gal/18" O.C.
Helianthus debilis	Beach Sunflower	1-2' x 2-3'	Full Sun	High	Baywalk	✓	12" O.A. /1 Gal/15" O.C.
Ipomoea imperati	Railroad Vine	1-2' x spreads indefinite	Full Sun	High	Baywalk	✓	12" O.A. /1 Gal/18" O.C.
Ipomoea pes-caprae	Railroad Vine	2-4' x 2-4'	Full Sun	High	Baywalk	✓	12" O.A. /1 Gal/18" O.C.
Iva imbricata	Dune Marsh Elder	2-4' x 2-4'	Full Sun	High	Baywalk	✓	12" O.A. /1 Gal/18" O.C.
Kalanchoe blossfeldiana	Kalanchoe	12-18" x 2-3'	Full Sun	Moderate	Both		12" O.A. /1 Gal/18" O.C.
Lantana depressa var. floridana	Pineland Lantana	2-4' x 3-5'	Full Sun	High	Baywalk	✓	12" O.A. /1 Gal/15" O.C.
Lantana montevidensis	Trailing Lantana	12-18" x 3-5'	Full Sun	High	Both	✓	12" O.A. /1 Gal/15" O.C.
Licania michauxii	Gopher-Apple	6-12" x spreads indefinite	Full Sun	High	Baywalk	✓	18" Ht./ 3 Gal/ 24" O.C./ Full
Liriope muscari 'Evergreen Giant'	Evergreen Giant Lilyturf	1-2' x 1-2'	Sun to FShade	Moderate	Both		12" O.A. /6" Pot/24" O.C.
Microsorum scolopendrium	Wart Fern	1-2' x spreads indefinite	FS to PS	Med to Low	Riverwalk		12" O.A. /1 Gal/18" O.C.
Mimosa strigillosa	Sensitive Plant	6-12" x spreads indefinite	FS to PS	Med to Low	Riverwalk	✓	12" O.A. /1 Gal/15" O.C.
Okenia hypogaea	Burrowing Four-O'clock	6" x 3-5'	Full Sun	High	Baywalk	✓	12" O.A. /1 Gal/18" O.C.
Opuntia humifusa	Prickly-Pear Cactus	1-2' x 1-2'	Full Sun	High	Baywalk	✓	12" O.A. /1 Gal/18" O.C.
Portulaca oleracea	Common Purslane	6" x 2-3'	Full Sun	High	Baywalk		12" O.A. /1 Gal/18" O.C.
Sedum sarmentosa	Star Sedum	6" x 2-3'	FS to PS	Med to High	Baywalk		12" O.A. /1 Gal/18" O.C.
Sesuvium portulacastrum	Sea Purslane	6-12" x spreads indefinite	Full Sun	High	Baywalk	✓	12" O.A. /1 Gal/18" O.C.
Trachelospermum asiaticum	Asiatic Jasmine	1-2' x 10-12'	Sun to FShade	Moderate	Both		12" O.A. /1 Gal/18" O.C.
Tradescantia pallida 'Purpurea'	Purple Heart	12-18" x spreads indefinite	FS to PS	Moderate	Both		12" O.A. /1 Gal/18" O.C.
Verbena maritima	Beach Verbena	6-12" x 3-5'	Full Sun	Med to High	Baywalk	✓	12" O.A. /1 Gal/18" O.C.

Denotes a plant that has a high tolerance for aerosol salt spray

Botanical Name	Common Name	Size and Spacing Height x Width	Sun/Shade Light Preference	Aerosol Salt Spray Tolerance	Baywalk, Riverwalk, or Both	Florida Native	Minimum Size Requirements
ORNAMENTAL GRASSES							
Muhlenbegia capillaris	Pink Muhly Grass	3-5' x 2-3'	Full Sun	Moderate	Both	✓	18" O.A./ 1 Gal/ 24" O.C.
Spartina alterniflora	Smooth Cordgrass	3-6' x 3-5'	Full Sun	High	Baywalk	✓	24" OA/ 3 Gal./ 24" O.C.
Spartina bakeri	Sand Cordgrass	3-4' x 3-5'	Full Sun	High	Both	✓	24" OA/ 3 Gal./ 24" O.C.
Spartina patens	Saltmeadow Cordgrass	1-3' x 3-5'	Full Sun	High	Baywalk	✓	12"-18" OA/ 1 Gal./ 18" O.C./ Full
Tripsacum dactyloides	Fakahatchee Grass	4-8' x 4-6'	FS to PS	Med to High	Both	✓	30" Ht./ 3 Gal/ 36' O.C.
Tripsacum floridana	Florida Gama Grass	3-4' x 4-6'	FS to PS	Med to High	Both	✓	24" O.A./ 3 Gal/ 30" O.C.
Uniola paniculata	Sea Oats	3-4' x spreads	Full Sun	High	Baywalk	✓	12"-18" OA/ 1 Gal./ 18" O.C./ Full
VINES							
Bougainvillea glabra	Bougainvillea, Paper Flower	20-30' with support	Full Sun	High	Both		7 Gal / 5' Trl
Campsis radicans	Trumpet Vine	Spreads indefinite	FS to PS	Low	Riverwalk	✓	1 Gal
Ficus pumila	Creeping Fig	6" x spreads indefinite	FS to PS	Moderate	Both	✓	3 Gal
Lonicera sempervirens	Trumpet Honeysuckle	Spreads indefinite	FS to PS	Unknown	Riverwalk	✓	7 Gal / 5' Trl
Passiflora incarnata	Maypop, Passionflower	6-8' x 3-6'	FS to PS	Moderate	Both	✓	7 Gal / 5' Trl
Senecio confusus	Mexican Flame Vine	Spreads indefinite	FS to PS	Low	Riverwalk	✓	1 Gal
Tecomaria capensis	Cape honeysuckle	12-16' x 6-8'	Full Sun	High	Both		3G Org Yl
TURFGRASSES							
Cynodon dactylon	419 Bermuda Grass	2-6" x 2-6"	Full Sun	Moderate	Both		
Paspalum distichum	Seashore Paspalum	6-24" x spreads	Full Sun	High	Baywalk		
Stenotaphrum secundatum	St. Augustine Grass	4-12" x spreads	FS to PS	Med to High	Both		
Zoysia japonica	Zoysia Grass	2-6" x spreads	FS to PS	High	Both		

Denotes a plant that has a high tolerance for aerosol salt spray

MATERIALS MATRIX

REQUIRED ELEMENTS MATRIX

Unifying Design Element	Item	Location	Manufacturer/ Supplier (or approved equal)	Size	Approved Colors	Warranty	Required?	Min. Standard
	Concrete Permeable Paver	Paved promenade Pervious paved areas	Old Castle, Earth Surfaces of America	3” x 12” x 3 1/8” th, 4” x 16” x 4” th or 12” x 6” x 3 1/8 th (for heavy vehicular use only)	Light Gray Natural Gray Sand Buff	N/A	**YES**	Permeable paver system with marble chip or seashell aggregate
	River Rock	3’ detectable zone at benches and seawall **Except**: Amenity Walk	Olimar Stone	2” - 3” pebble	White/Brown	N/A	**YES**	Match existing
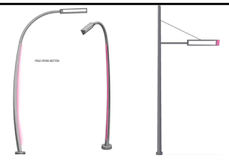	Baywalk / Riverwalk Lightpoles	Placed at western edge of Baywalk/ Riverwalk. Spaced no greater than 60’ apart. 50’ is preferred.	Assembled and Shipped by Louis Poulsen	16’ - 17’ ht.	Aluminum with LED Color Changing Strip	5 years	**YES**	Fixture, Pole and Line of Light
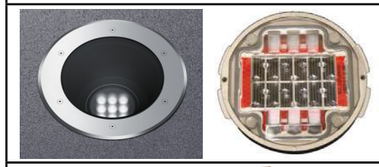	In-grade lighting fixture **OR** Solar Marker	25’ on center in safety zone or circulation zone adjacent to the bulkhead/water	Tesis round uplight - 5181.023 or SolaTile Rigel 60	Erco or Solar Path	Stainless steel for both	1 year	**YES**	Uplight: Adjustable, LED, 7 Watts Marker: Solar-powered LED
	Neoliviano Bench	Passive zone. Spaced no greater than 60’ apart. 50’ spacing on center is preferred.	Landscape Forms	24” chair, 69” bench, or 118” bench w/ center arm	Aluminium Natural wood	3 years	**YES**	Freestanding Marine grade Aluminium Thermory or Greenheart wood
	Lakeside Litter Receptacle	Trash receptacle Min. 10’ from seating & 150’ on center	Landscape Forms	21” x 36” x 30 GL.	Silver	3 years	**YES**	Side Opening Custom Mangrove Design - Aluminium
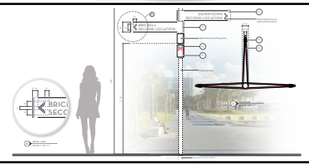	District Flag Directional Sign on Pole (New or Existing Pole)	Placed at both ingress and egress of property location	N/A	*See Page 15*	*See Page 15*	N/A	**YES**	Two (2) Signs: Placed at both ingress and egress of property location
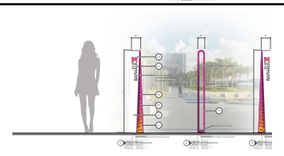	District Identity Sign	Placed at midpoint of property location	N/A	*See Page 16*	*See Page 16*	N/A	**YES**	One (1) Sign: Placed at midpoint of property location

WATERFRONT MATERIALS INDEX
Materials Matrix

Unifying Design Element	Item	Location	Manufacturer/ Supplier (or approved equal)	Size	Approved Colors	Warranty	Required?	Min. Standard
	Concrete Permeable Paver	Paved promenade Pervious paved areas	Old Castle, Earth Surfaces of America	3” x 12” x 3 1/8” th, 4” x 16” x 4” th or 12” x 6” x 3 1/8 th (for heavy vehicular use only)	Light Gray Natural Gray Sand Buff	N/A	**YES**	Permeable paver system with marble chip or seashell aggregate
	Decorative concrete paving	Limited use only	Connery Concrete	6 x 6 x 4” th No. 10 W.W.M. w/ thickened edges	White Portland cement with exposed seashell aggregate	N/A	Optional	3000 psi after 30 days Cast-in-place A.S.T.M. C 150, Type I & II
	River Rock	3’ detectable zone at benches and seawall	Olimar Stone	2” - 3” pebble	White/Brown	N/A	**YES**	Match existing
	Concrete with salt finish	Steps adjacent to the water	Homestead Paving	6” x 6” x 4” th No. 10 W.W.M. w/ thickened edg-es	Gray Portland Cement w/ Rock Salt Finish	N/A	Optional	3000 psi after 30 days Cast-in-place A.S.T.M. C 150, Type I & II Apply rock salt at 5 lb./ sq ft min.
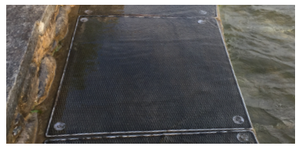	Anti-slip mesh	Steps adjacent to the water	C & R Metals	Varies	Natural Metal Finish	N/A	Optional	Stainless steel Marine grade mesh w/ ss fastening screws
	Wood decking	Over-water walkways	Thermory	6 x 5/4” th	Natural	N/A	Optional	Thermally/chemically-modified wood
	Recycled Plastic FiberFORCE	Over-water walkways	Bedford	Varies	Gray NWW	50 Years Limited Warranty	Optional	95% recycled content 100% recyclable
	Reclaimed wood	Wood decking	Miles Black, Miles of Wood	Varies	Natural	N/A	Optional	Locally sourced Greenheart

Lighting

Unifying Design Element	Item	Location	Manufacturer (or approved equal)	Dimensions	Approved Colors	Warranty	Required?	Min. Standard
	Baywalk Lightpole	Baywalk Minimum spacing: every 50' on center (or less)	Assembled and Shipped by Louis Poulsen	17' ht.	Aluminum LED Color changing strip	5 years	**YES**	Fixture: Aluminum housing with structured light grey (229) finish. 59W LED in 3000K CCT with reflector for 55° cutoff. Clear U.V. stabilized acrylic lens on both sides. BUG rating: B1-U3-G1. Pole: 3.5" O.D. top x 5.5" O.D. bottom pole fabricated from 6063-T4 aluminum tubing (heat treated to T6 condition after welding); with structured light grey (229) finish. 8 1/2" sq. x 1" thick aluminum base plate (6061-T6 alloy) with structured light grey (229) finish 5.2" conduit opening slotted holes to allow for field adjustability. Casambi bluetooth controller installed on pole Line of light: LED linear flexible of RGB color changing leds. Aluminum extrusion assembled onto pole by hidden screws with brushed aluminum finish.
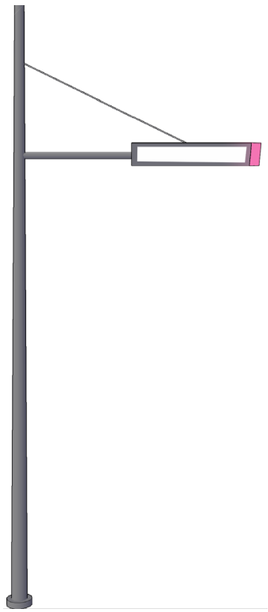	Riverwalk Lightpole	Riverwalk Minimum spacing: every 50' on center (or less)	Assembled and Shipped by Louis Poulsen	16' ht. Pole 12' ht. Fixture	Aluminum LED Color changing tip ***(See min. standard)**	5 years	**YES**	Fixture: Aluminium housing with structured light grey (229) finish clear U.V. stabilized acrylic lens on both sides. Aluminium housing with structured light grey (229) finish clear U.V. stabilized acrylic lens on both sides. Triangular diffuser with U.V. protection. Pole: Taper pole; bottom diameter 6"; top diameter 3.5"; 0.188" wall aluminium tube with structured light grey (229) powder coated finish. Hand hole with flush fitting aluminium door attached with (2) SS C-sunk screws and powder coated finish. ***LED Color changing tip is optional upstream of the Flagler street bridge on the north bank of the River and upstream of the Metro-rail bridge on the south bank of the river.**

WATERFRONT MATERIALS INDEX
Materials Matrix

Unifying Design Element	Item	Location	Product name	Manufacturer (or approved equal)	Dimensions	Approved Colors	Warranty	Required?	Min. Standard
OR	In-grade Lighting	Spaced every 25' on center in detectable zone at seawall	Tesis round - 35181.023	Erco	6 5/16" dia.	Stainless steel	One year	**YES** OR	Adjustable, LED, 7 Watts
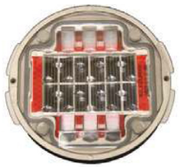	Solar marker	Spaced every 25' on center in detectable zone at seawall	SolaTile Rigel 60	Solar Path	R64 x H40mm	Stainless steel Blue Light	One year	**YES**	Adjustable, LED, 7 Watts
	Tree Strapped Lights	Planting areas	Denali on PM2 Tree Strap	BK Lighting	Varies	Black	5 year limited	Optional	LED, 12-27 Watts - Tree Dependant
	Tree Up-lighting	Planting areas	Denali on Pow-er Pipe	BK Lighting	Varies	Black	5 year limited	Optional	LED, 12-27 Watts - Tree Dependant
	Underwater Fish Lights	N/A	Flex Tube SE	Acclaim	Variable length	Color Changing	3 years standard, 5 years optional	Optional	RGB LED. 3 W Watts/ft.
	Underbench Lighting	N/A	iQ67 Flex Mini	Q-Tran	Variable length	White	2 years	Optional	LED, 3.3 Watts/ft.
	Mangrove Trellis	N/A	Neonlyte	Acolyte	Variable	RGB + White	5 years	Optional	Mangrove Trellis LED, 3 Watts/ft.

Site Furniture

Unifying Design Element	Item	Location	Manufacturer (or approved equal)	Size	Approved Colors	Warranty	Required?	Min. Standard
	Neoliviano Bench	Miniumum: Spaced every 50' on center (or less) in passive zone.	Landscape Forms	24" chair, 69" bench, or 118" bench w/ center arm	Aluminium Natural wood	3 Years	**Yes**	Freestanding Marine grade Aluminium Thermory or Greenheart wood
	Bench MLB870	TBD	Maglin	32.2"Ht. x 69.5"L x 24.3"	Gunmetal Sandstone PCS	5 Years	Optional	Marine grade or E-Coat Rust Proofing Thermory wood or High density paper composite
	Stone & Wood Bench	Baywalk	Sutton Brick & Stone + Maglin	6' & 8' Length 2' & 4' Width With back or backless	Natural Shellstone Natural wood	Maglin-5 years	Optional	Dominican Shellstone River rock border Greenheart wood Mangrove patterns
	Stone & Wood Bench	Baywalk	Sutton Brick & Stone + Maglin	Customizable length and width	Natural Shellstone Natural wood	Maglin-5 years	Optional	Dominican Shellstone River rock border Greenheart wood Mangrove patterns
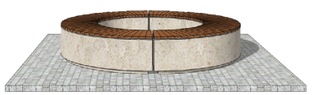	Stone Donut Bench	Baywalk	Sutton Brick & Stone + Maglin	6' & 10' outside di-ameter	Natural Shellstone Natural wood	Maglin-5 years	Optional	Dominican Shellstone Thermory or Mangrove on sides
	Chipman chair	TBD	Landscape Forms	22' x 30" W x 33"Ht.	Silver	3 Years	Optional	Marine grade Aluminium 100% recyclable

Site Furniture

Unifying Design Element	Item	Location	Manufacturer (or approved equal)	Size	Approved Colors	Warranty	Required?	Min. Standard
	Catena Chair	TBD	Landscape Forms	23” x 21” W x 30” Ht.	Silver	3 Years	Optional	Marine grade Aluminium 100% recyclable
	Table Foro or Battery Collection	TBD	Maglin	30” diameter / 36” diameter	Gunmetal	5 years	Optional	Marine grade or E-Coat Rust Proofing 100% recyclable
	Column Table	TBD	Forms+Surfaces	30” diameter / 36” diameter	Stainless Steel Finish: Satin	1 Year	Optional	Marine grade Stainless Steel or Aluminium 100% recyclable
	Chill Lounge	TBD	Landscape Forms	28” x 33”Ht. x 62”L.	Baywalk & Riverwalk Color	3 Years	Optional	35% Recycled components, 100% recyclable
	Chaise Lounge MCL720	TBD	Maglin	41.25”Ht. x 61.9”L. x 23.5”	Yellow Gunmetal	5 Years	Optional	Marine grade or E-Coat Rust Proofing
	Lakeside Litter Receptacle	Min. 10’ from seating & 150’ on center	Landscape Forms	21” x 36” x 30 GL.	Silver	3 Years	**Yes**	Side opening Custom Mangrove design Aluminium

Site Furniture

Unifying Design Element	Item	Location	Manufacturer (or approved equal)	Size	Approved Colors	Warranty	Required?	Min. Standard
	Baywalk & Riverwalk Bollard	TBD	Sutton Brick & Stone	24” x 24” x 24”	Natural Shellstone	N/A	Optional	Dominican Shellstone Mangrove patterns carved
	Cube Bollard + custom mangrove pattern	TBD	Metalco	1.3’ x 1.3’ x 1.3’	Stainless Steel	2 years	Optional	Stainless Steel or Aluminium Mangrove Pattern
	Waterfront Bollard	Riverwalk	Louis Poulsen	10.2” W x 35.1” H x 10.2” L	Aluminium	5 years	Optional	Aluminium
	Pet waste receptacles and bag dispensers - Modern Dog Kit	Baywalk & Riverwalk	Pet Pick ups	72.4” high x 19.4” wide x 9.1” deep	Aluminium	-	Optional	Aluminium
	Loop Bike Rack	TBD	Landscape Forms	14” x 36” x 31”	Silver	3 years	Optional	Marinegrade Aluminium 100% recyclable
	Chess Table	TBD	Landscape Forms	27.75” x 25.5” x 32.5”	Silver	3 years	Optional	Marinegrade Aluminium 100% recyclable

WATERFRONT MATERIALS INDEX
Materials Matrix

Unifying Design Element	Item	Location	Manufacturer (or approved equal)	Size	Approved Colors	Warranty	Required?	Min. Standard
	Corocord Domes & Arches	Brickell Park, Parcel B and/ or Bayfront Park	Kompan	Standard	Aluminum finish and Baywalk colors	Depending on parts, lifetime to two years	Optional	Hot-tip galvanized steel
	Cocowave Pendelum Swing	Brickell Park, Parcel B and/ or Bayfront Park	Kompan	Standard	Aluminum finish and Baywalk colors	Depending on parts, lifetime to two years	Optional	Hot-tip galvanized steel
	Cross Training fitness equipment	Brickell Park, Parcel B and/ or Bayfront Park	Kompan	Standard	Aluminum finish and Baywalk colors	Depending on parts, lifetime to two years	Optional	Hot-tip galvanized steel
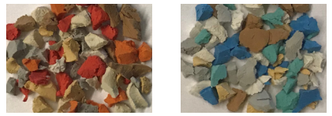	Pebbleflex 2.0	Underneath playground and fitness equipment on the Baywalk	Landscape Structures	Standard	Neutrals (not black) with red accents or blue accents	5 years	Optional	Cushion layer is made from 100% post-consumer recycled material; pebbles are made of 20% post-industrial recycled material, and are all recyclable
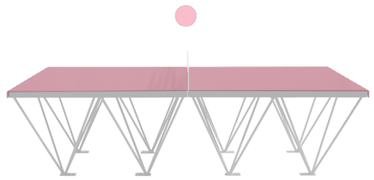	Ping Pong Table The Ephemeralist	TBD	POPP	Standard	Pink / Gray Aluminium	5 years structural 2 years treatement	Optional	Aluminium Concrete
	Chess Table	TBD	Urban Conga	Standard	Baywalk & Riverwalk Colors	1 year	Optional	Powdercoated Steel

APPENDIX

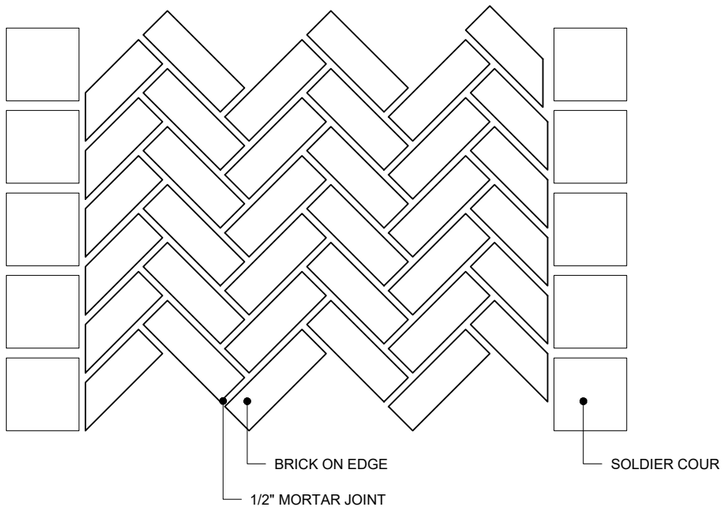

HERRINGBONE PATTERN DETAIL
SCALE: NTS

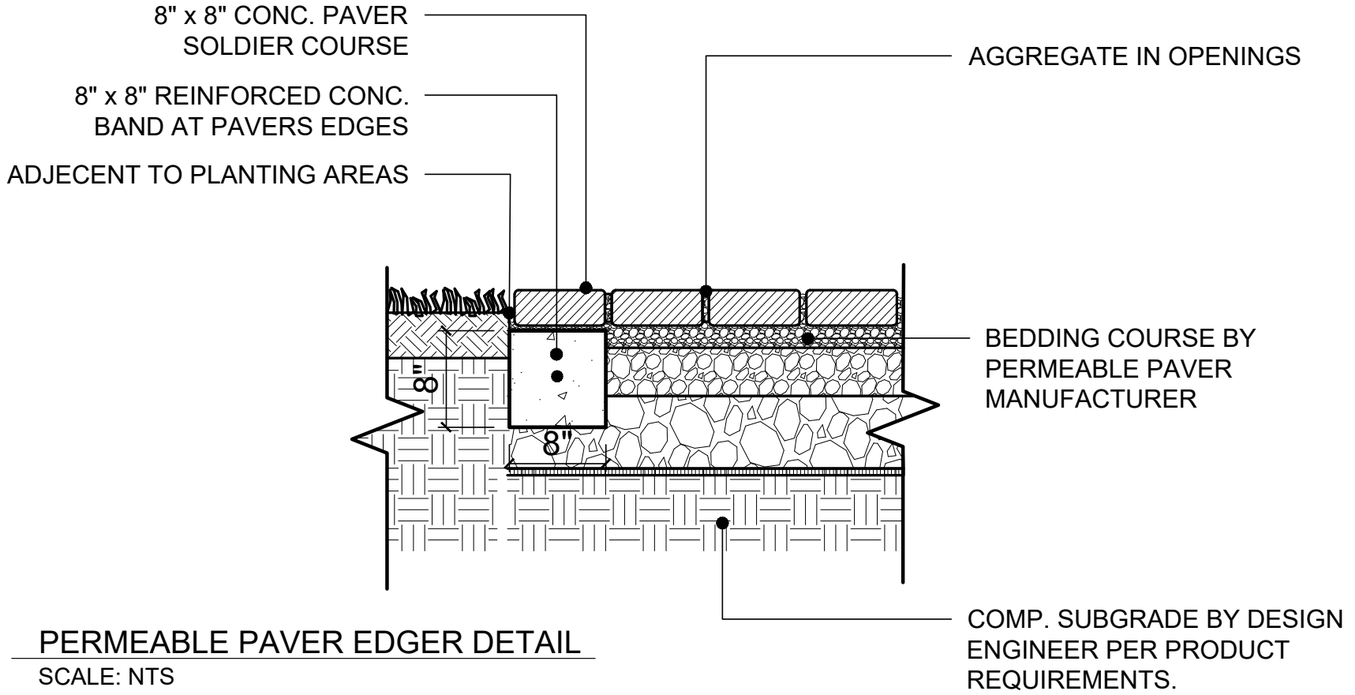

PERMEABLE PAVER EDGER DETAIL
SCALE: NTS

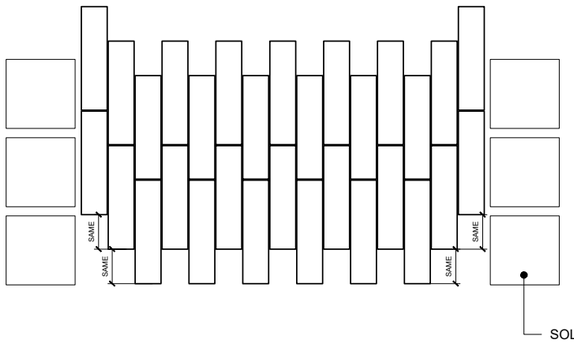

RUNNING BOND PATTERN DETAIL
SCALE: NTS

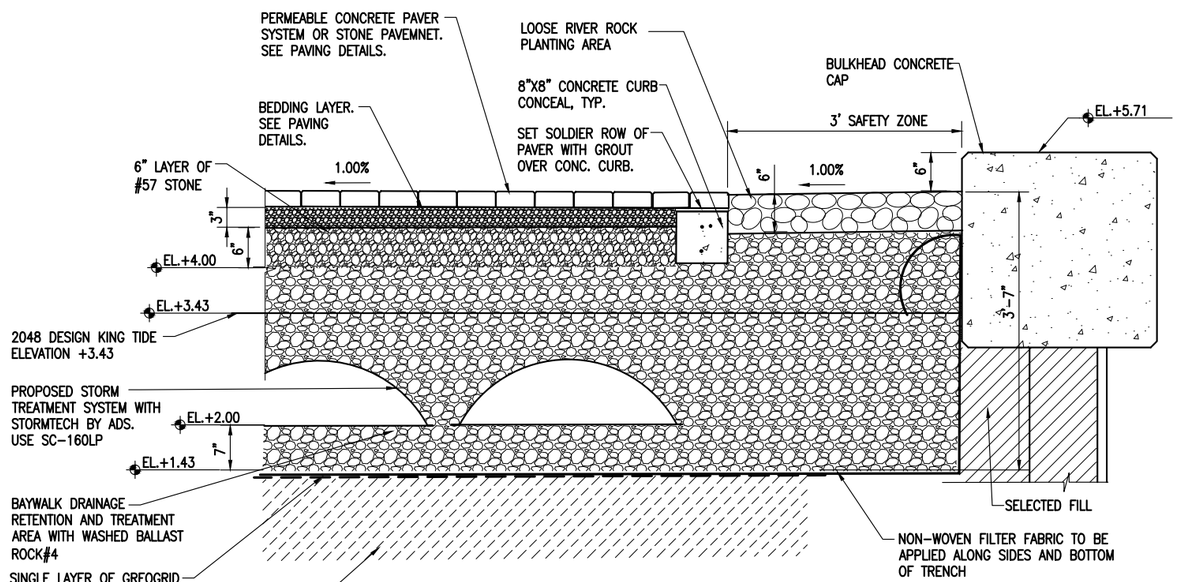

3 TYPICAL BAYWALK DRAINAGE SYSTEM
SCALE: NTS

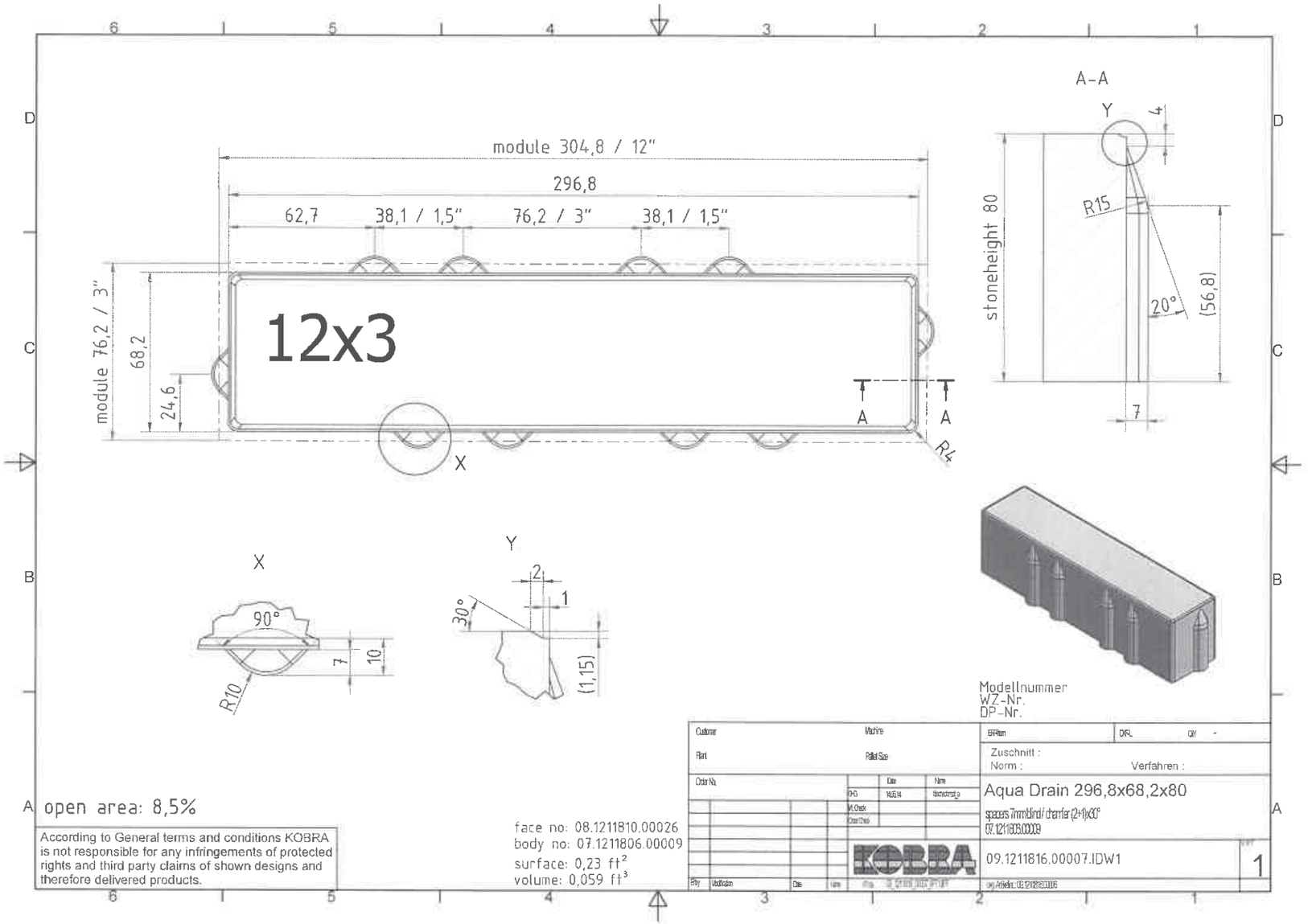
module 304,8 / 12"
296,8
62,7
38,1 / 1,5"
76,2 / 3"
38,1 / 1,5"
module 76,2 / 3"
68,2
24,6
12x3
A
A
X
R4
A-A
Y
4
stoneheight 80
R15
20°
(56,8)
7
X
90°
7
10
R10
Y
2
1
30°
(1,15)
Modellnummer
WZ-Nr.
DP-Nr.
open area: 8,5%
According to General terms and conditions KOBRA is not responsible for any infringements of protected rights and third party claims of shown designs and therefore delivered products.
face no: 08.1211810.00026
body no: 07.1211806.00009
surface: 0,23 ft²
volume: 0,059 ft³
Customer
Machine
Plant
Pallet Size
Order No.
Date
Name
DRG
16.10.14
M. Check
Chief Check
EP-Item
DKL
QTY
-
Zuschnitt :
Norm :
Verfahren :
Aqua Drain 296,8x68,2x80
spacers 7mm blind / chamfer (2+1)x30°
07.1211806.00009
09.1211816.00007.IDW1
SHT
1
Ersetzt: 09.1211816.00006

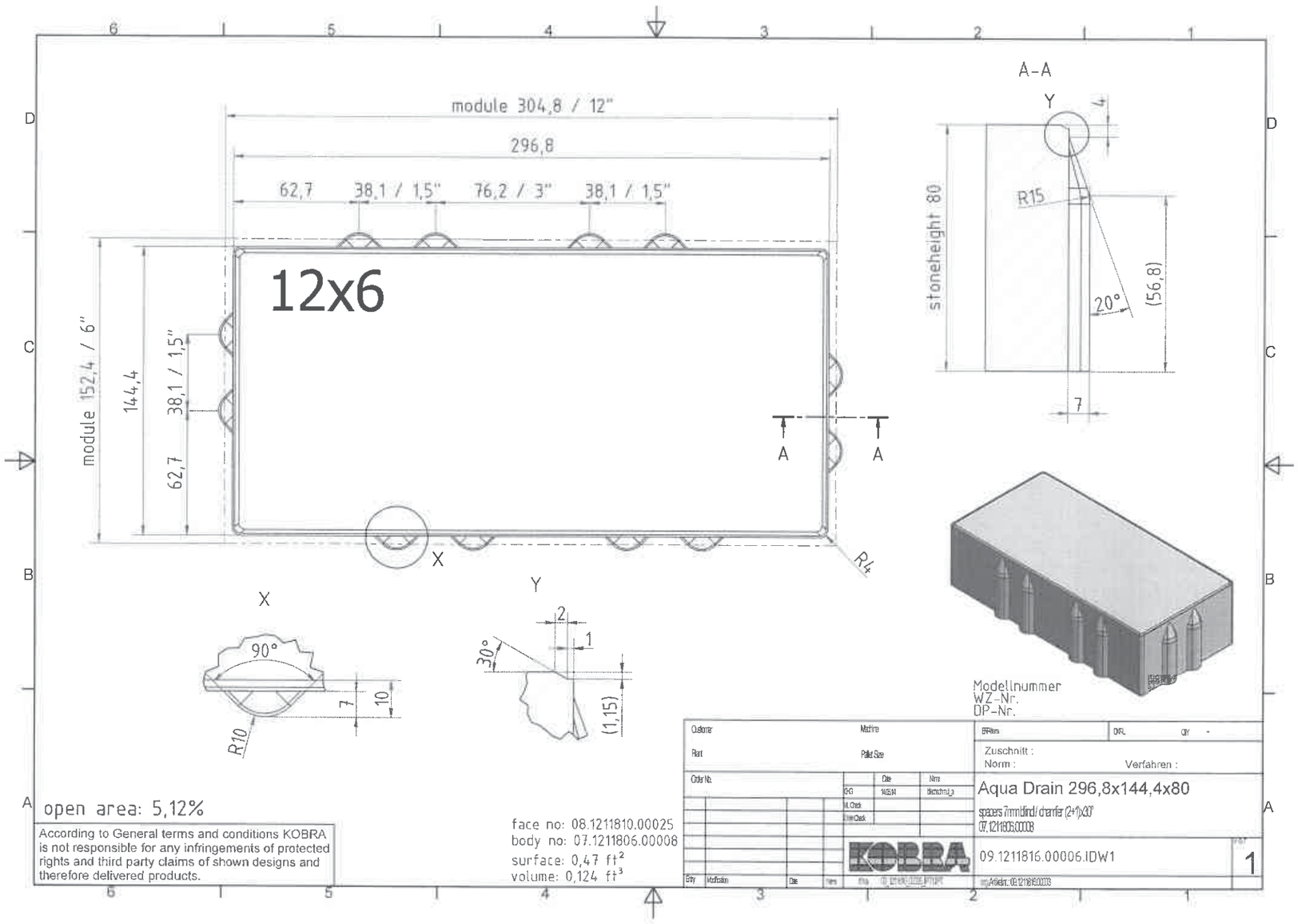
module 304,8 / 12"
296,8
62,7
38,1 / 1,5"
76,2 / 3"
38,1 / 1,5"
12x6
module 152,4 / 6"
144,4
38,1 / 1,5"
62,7
A-A
Y
4
R15
stoneheight 80
20°
(56,8)
7
A
A
X
Y
R4
X
90°
7
10
R10
30°
2
1
(1,15)
Modellnummer
WZ-Nr.
DP-Nr.
open area: 5,12%
According to General terms and conditions KOBRA is not responsible for any infringements of protected rights and third party claims of shown designs and therefore delivered products.
face no: 08.1211810.00025
body no: 07.1211806.00008
surface: 0,47 ft²
volume: 0,124 ft³
Customer
Material
Plant
Pallet Size
Order No.
Date
Name
Zuschnitt :
Norm :
Verfahren :
Aqua Drain 296,8x144,4x80
spacers 7mm(incl.) chamfer (2+1)x30°
07.1211806.00008
KOBRA
09.1211816.00006.IDW1
1

VER	BY	DATE	DESCRIPTION
00	DAN	2/20/18	BASED ON 131-19403-000, ADDING PHOTOSENSOR
01	DAN	7/19/18	REMOVE PHOTOCELL, ADD COLOR LINE FROM 131-19416-001 CONCEPT

BUG RATING: B1-U3-G1

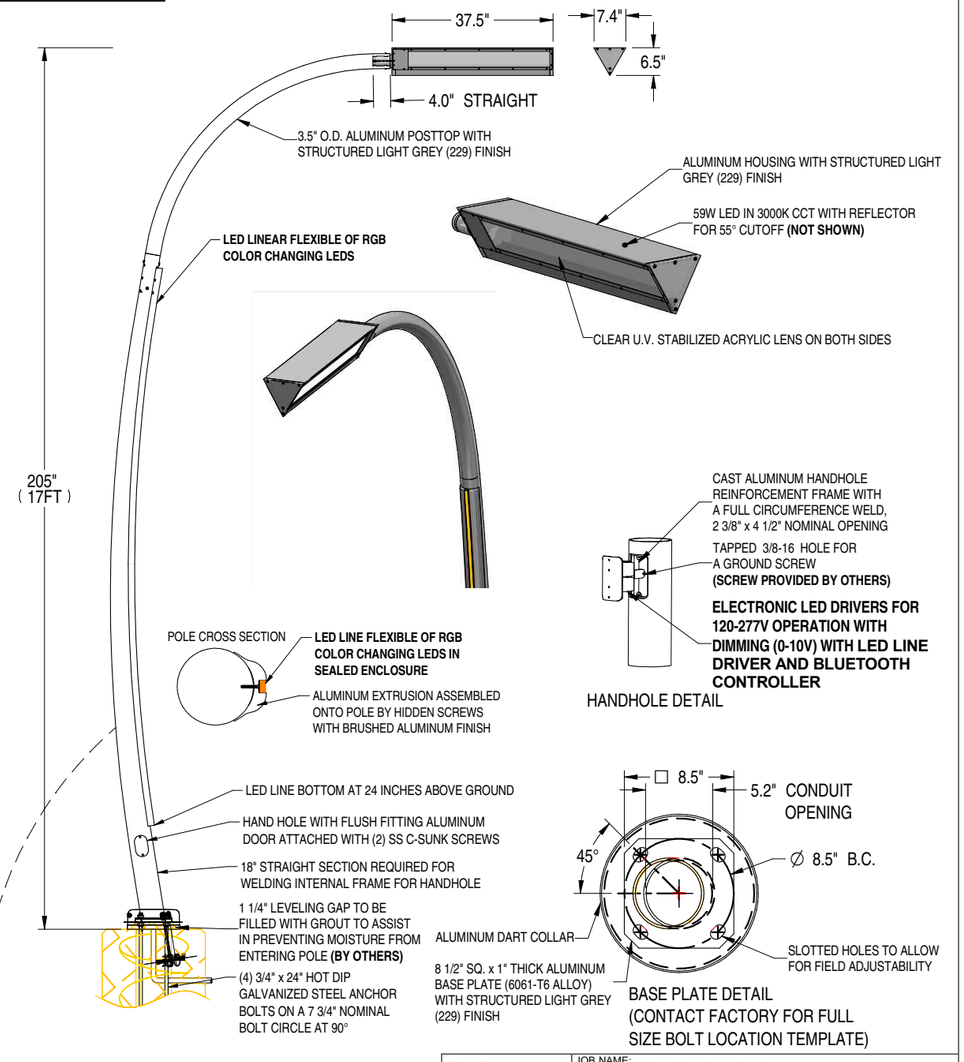

NOTES:
1. FINISH: AS NOTED
2. VOLTAGE: 120-277V
3. POLE IS RATED FOR 132 MPH/170MPH (AASHTO 2013/FBC 2014) WITH A 3 SECOND GUST FACTOR

PROPRIETARY AND CONFIDENTIAL
THE INFORMATION CONTAINED IN THIS DRAWING IS THE SOLE PROPERTY OF LOUIS POULSEN USA, INC. ANY REPRODUCTION IN PART OR AS A WHOLE WITHOUT THE WRITTEN PERMISSION OF TARGETTI POULSEN USA, INC. IS PROHIBITED

louis poulsen
LOUIS POULSEN USA, INC.
3260 MERIDIAN PKWY
FT LAUDERDALE FL. 33331
PHONE: (954) 349 2525
FAX (954) 349 2500

INCHES
THIRD ANGLE PROJECTION
TOLERANCE:
DECIMAL X.XX = ± .03
X.XXX = ± .010
ANGULAR ± 1/2°

JOB NAME: Miami Bayfront Park			
TITLE: MUSEUM PARK LED FIXTURE/CURVED TAPER POLE			
MOD. FROM: Std SAP			QUOTE NO.: 20059495
DRAWN BY: DAN	DATE: 7/19/2018	APPROVED BY:	TYPE: -
MATERIAL: AS NOTED			VERSION: 01
SCALE: NTS	SHEET: 1 OF 1	DWG. NO.: 131-19470-001	

VER	BY	DATE	DESCRIPTION
01	DAN	7/19/18	REVISED TRIAGULAR ROD DESIGN; ADD BLUETOOTH + RGB TO FRONT ACCENT

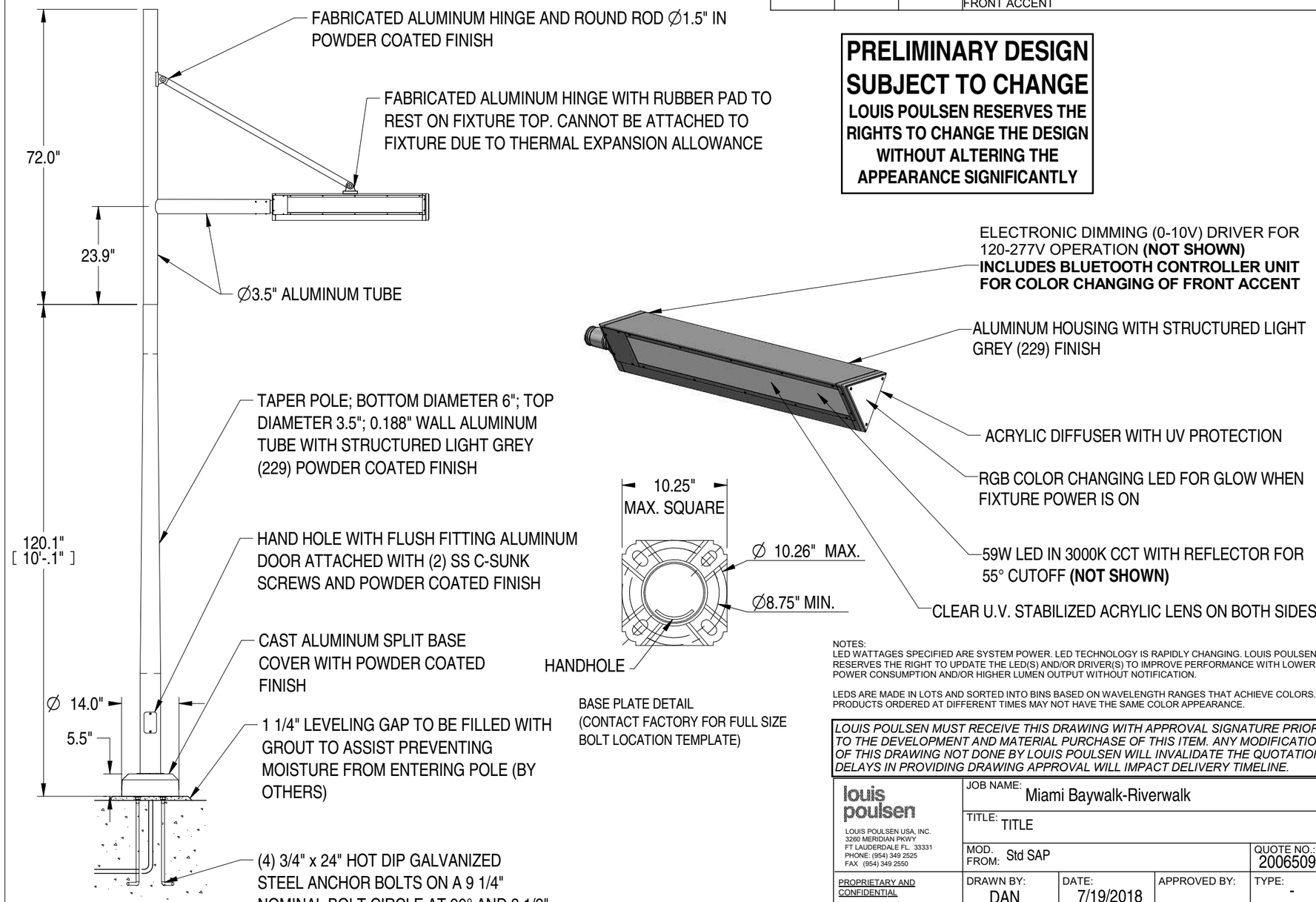

PRELIMINARY DESIGN SUBJECT TO CHANGE
LOUIS POULSEN RESERVES THE RIGHTS TO CHANGE THE DESIGN WITHOUT ALTERING THE APPEARANCE SIGNIFICANTLY

BASE PLATE DETAIL
(CONTACT FACTORY FOR FULL SIZE BOLT LOCATION TEMPLATE)

NOTES:
LED WATTAGES SPECIFIED ARE SYSTEM POWER. LED TECHNOLOGY IS RAPIDLY CHANGING. LOUIS POULSEN RESERVES THE RIGHT TO UPDATE THE LED(S) AND/OR DRIVER(S) TO IMPROVE PERFORMANCE WITH LOWER POWER CONSUMPTION AND/OR HIGHER LUMEN OUTPUT WITHOUT NOTIFICATION.

LEDS ARE MADE IN LOTS AND SORTED INTO BINS BASED ON WAVELENGTH RANGES THAT ACHIEVE COLORS. PRODUCTS ORDERED AT DIFFERENT TIMES MAY NOT HAVE THE SAME COLOR APPEARANCE.

LOUIS POULSEN MUST RECEIVE THIS DRAWING WITH APPROVAL SIGNATURE PRIOR TO THE DEVELOPMENT AND MATERIAL PURCHASE OF THIS ITEM. ANY MODIFICATION OF THIS DRAWING NOT DONE BY LOUIS POULSEN WILL INVALIDATE THE QUOTATION. DELAYS IN PROVIDING DRAWING APPROVAL WILL IMPACT DELIVERY TIMELINE.

louis poulsen
LOUIS POULSEN USA, INC.
3260 MERIDIAN PKWY
FT LAUDERDALE FL. 33331
PHONE: (954) 349 2525
FAX (954) 349 2550

PROPRIETARY AND CONFIDENTIAL
THE INFORMATION CONTAINED IN THIS DRAWING IS THE SOLE PROPERTY OF LOUIS POULSEN USA, INC. ANY REPRODUCTION IN PART OR AS A WHOLE WITHOUT WRITTEN PERMISSION IS PROHIBITED.

JOB NAME: Miami Baywalk-Riverwalk			
TITLE: TITLE			
MOD. FROM: Std SAP			QUOTE NO.: 20065090
DRAWN BY: DAN	DATE: 7/19/2018	APPROVED BY:	TYPE: -
MATERIAL: AS NOTED			VERSION: 01
SCALE: NTS	SHEET: 1 OF 1	DWG. NO.: 131-19642-001	

NEOLIVIANO

Product Data Sheet

The NeoLiviano bench is a lyrical variation on NeoRomantico. Lighter in structure and form it has arms for extra comfort. Its slim profile coupled with a strong cast aluminum structure and wood slat seat and back make it versatile seating for both public and private spaces.

Bench

- Benches are available backed or backless.
- Bench can be freestanding, surface mounted, or embedded.
- Supports come in an anodized finish with no color options.
- Center arm option available for 118" bench only.
- Available only in Jarrah—exterior or interior finishes.

Finishes

- Anodized Aluminum Finish for Supports.
- Unfinished Exterior Woods.
- Interior Woods with LF-80 Finish.

Designed by Santa & Cole

BACKED	STYLE	DEPTH	WIDTH	HEIGHT	PRODUCT WEIGHT
	24"	26.5"	24"	31"	47 lb
	69"	26.5"	69"	31"	96 lb
	118"	26.5"	118"	31"	155 lb
	118" w/ center arm	26.5"	118"	31"	157 lb

BACKLESS	STYLE	DEPTH	WIDTH	HEIGHT	PRODUCT WEIGHT
	24"	19.5"	24"	17"	27 lb
	59"	19.5"	59"	17"	51 lb
	118"	19.5"	118"	17"	96 lb

Visit our landscapeforms.com for more information. Specifications are subject to change without notice.
Landscape Forms supports the Landscape Architecture Foundation at the Second Century level.
©2016 Landscape Forms, Inc. Printed in U.S.A.

Landscape Forms, Inc. | 800.521.2546 | F 269.381.3455 | 7800 E. Michigan Ave., Kalamazoo, MI 49048

MIAMIDDA
DOWNTOWN DEVELOPMENT AUTHORITY

NEOLIVIANO

Materials / Colors

Wood

Exterior woods weather to a warm, pewter gray; no finish is applied so no maintenance is required. Available in Jarrah and Domestically Sourced Thermally Modified Ash (DSTMA) exterior wood. Special stain may be specified for interior woods. Pricing for standard woods and options varies, see Price Book. (P) = Premium Woods

exterior no finish

jarrah (P) DSTMA

interior LF-80 finish

jarrah (P) DSTMA

Aluminum

aluminum

NEOLIVIANO IS MANUFACTURED USING THE FOLLOWING MATERIALS:

Material	Parts	Recyclable
aluminum	bench supports	100%
wood	seat/back panels	100%

Finishing
Supports are treated with Alodine® to provide corrosion protection.

Landscape Forms wood furniture for outdoor use is manufactured from wood species that weather naturally in outdoor settings to a beautiful pewter gray. We do not apply paints or finishes to these products and do not recommend the use of finishes which would require ongoing maintenance programs as the wood weathers. Our wood furniture for indoor use is finished with LF 80, a clear, catalyzed low-VOC acrylic finish.

Packaging Materials	Parts	Recyclable
biodegradeable plastic	product bagged to protect finish	100%
recycled skid		100%
cardboard with 35% recycled content		100%

To find local recyclers visit: for steel: www.recycle-steel.org; for cardboard: www.corrugated.org.

CARE AND MAINTENANCE

Neoliviano is designed and engineered to live a long, useful life in outdoor spaces without the use of chemical cleaners to maintain the finish. The durability, longevity and low maintenance of our products contribute to responsible stewardship of the earth's resources.

Metal: Clean surface as needed using a soft cloth or brush with a mild detergent. Avoid steam cleaning, abrasive cleansers, carbon steel brushes/wools and cleaners containing chlorine.

Wood: Exterior woods require no maintenance. If desired, the surface may be scrubbed with warm soapy water and soft bristle brush. Pressure washing, steel wool/wire brushes are not recommended. Heavily ingrained stains may be sanded away with fine grade sandpaper worked in the direction of the grain. Sanded wood will weather to a gray patina. Interior woods require only dusting or occasional cleaning with a good-quality furniture polish.

APPENDIX
Standard Stone Bench Details

Standard One Way Stone Bench with Wood

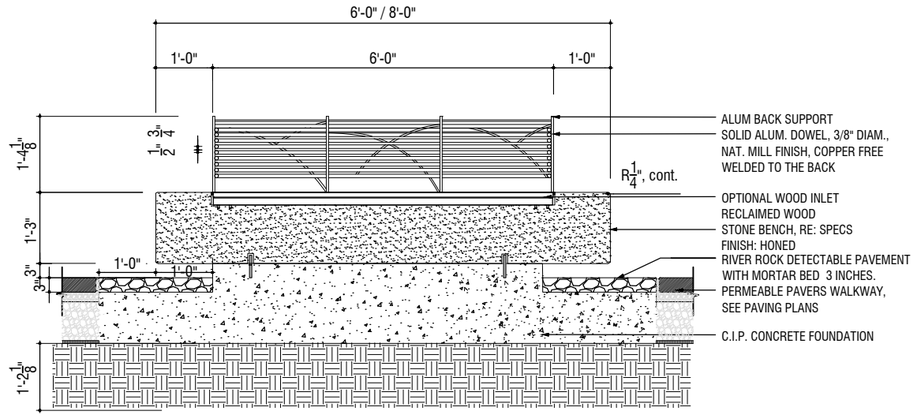

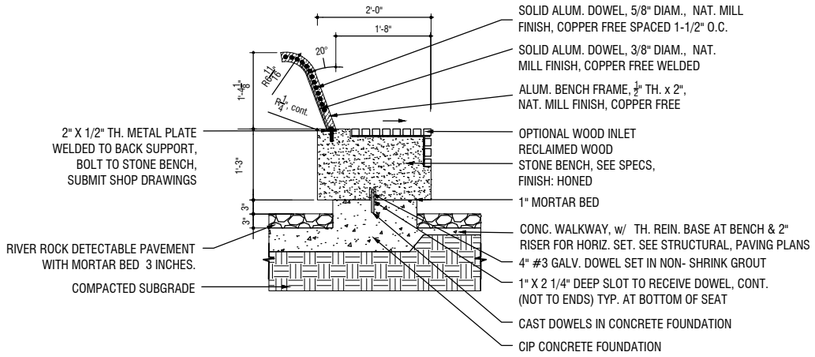

Standard Two Way Stone Bench

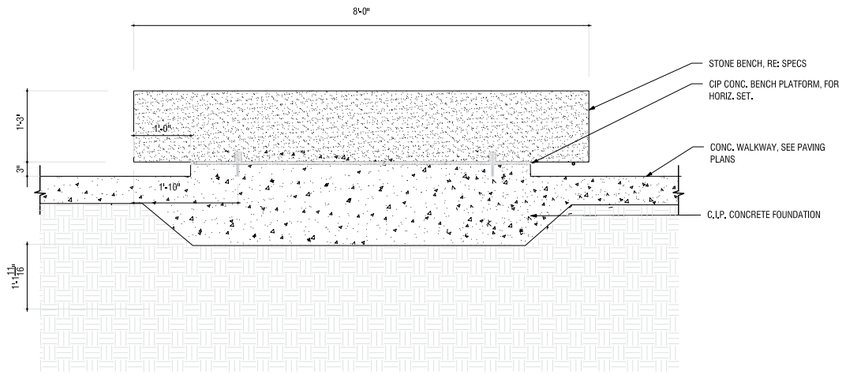

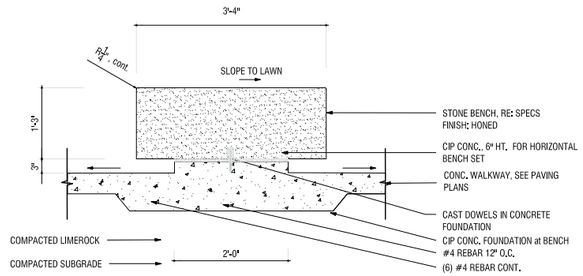

0 2' 4' 6'

SCALE: 3/8" = 1'-0"

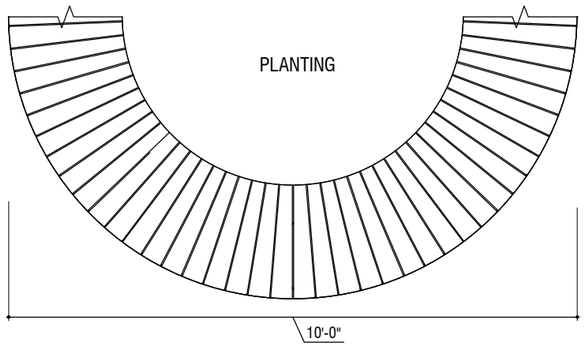
PLANTING
10'-0"

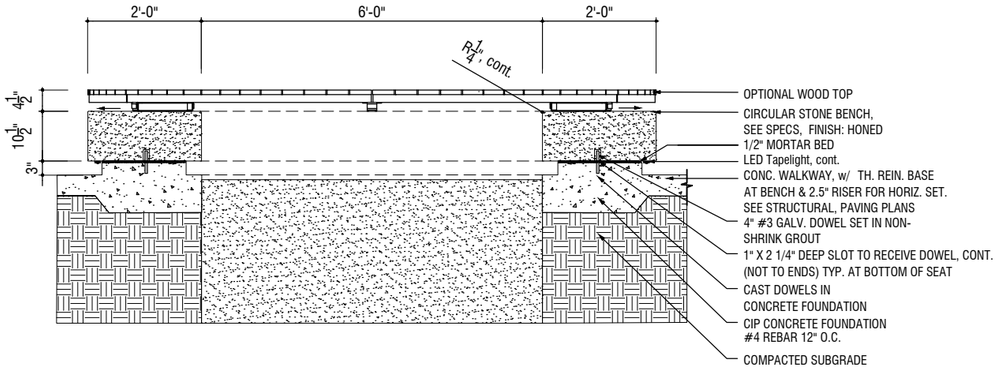
2'-0"
6'-0"
2'-0"
R1/4", cont.
4 1/2"
10 1/2"
3"
OPTIONAL WOOD TOP
CIRCULAR STONE BENCH,
SEE SPECS, FINISH: HONED
1/2" MORTAR BED
LED Tapelight, cont.
CONC. WALKWAY, w/ TH. REIN. BASE
AT BENCH & 2.5" RISER FOR HORIZ. SET.
SEE STRUCTURAL, PAVING PLANS
4" #3 GALV. DOWEL SET IN NON-
SHRINK GROUT
1" X 2 1/4" DEEP SLOT TO RECEIVE DOWEL, CONT.
(NOT TO ENDS) TYP. AT BOTTOM OF SEAT
CAST DOWELS IN
CONCRETE FOUNDATION
CIP CONCRETE FOUNDATION
#4 REBAR 12" O.C.
COMPACTED SUBGRADE

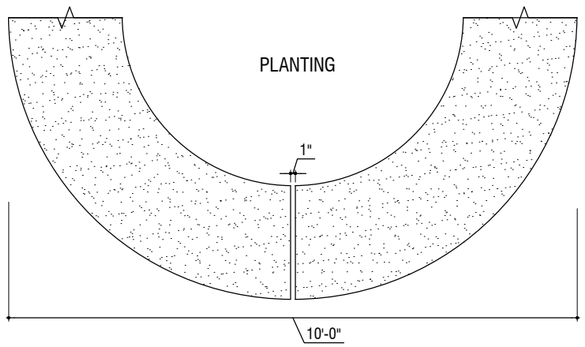
PLANTING
1"
10'-0"

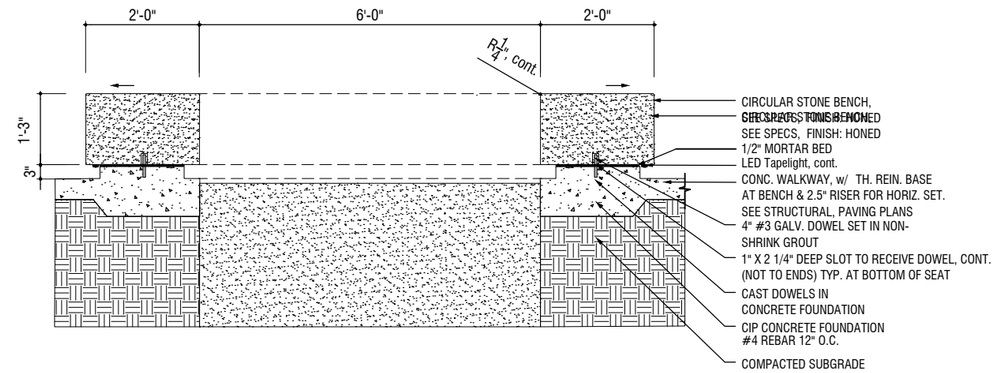
2'-0"
6'-0"
2'-0"
R1/4", cont.
1'-3"
3"
CIRCULAR STONE BENCH,
SEE SPECS, FINISH: HONED
1/2" MORTAR BED
LED Tapelight, cont.
CONC. WALKWAY, w/ TH. REIN. BASE
AT BENCH & 2.5" RISER FOR HORIZ. SET.
SEE STRUCTURAL, PAVING PLANS
4" #3 GALV. DOWEL SET IN NON-
SHRINK GROUT
1" X 2 1/4" DEEP SLOT TO RECEIVE DOWEL, CONT.
(NOT TO ENDS) TYP. AT BOTTOM OF SEAT
CAST DOWELS IN
CONCRETE FOUNDATION
CIP CONCRETE FOUNDATION
#4 REBAR 12" O.C.
COMPACTED SUBGRADE

0
2'
4'
6'

SCALE: 3/8" = 1'-0"

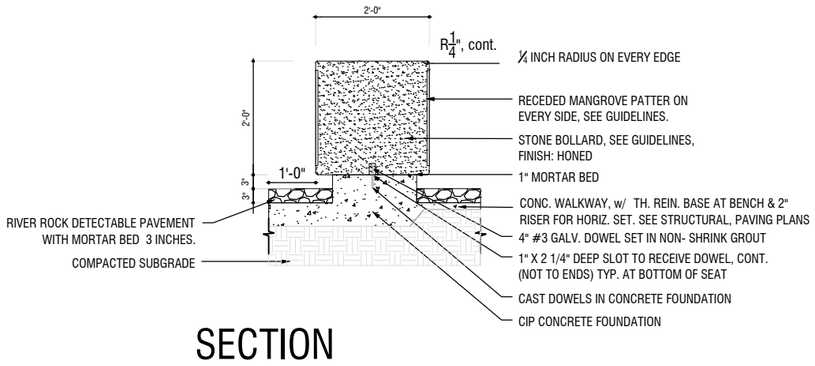

SECTION

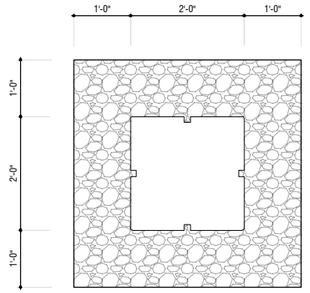

INDIVIDUAL INSTALLATION
1' RIVER ROCK BUFFER AROUND THE BOLLARD

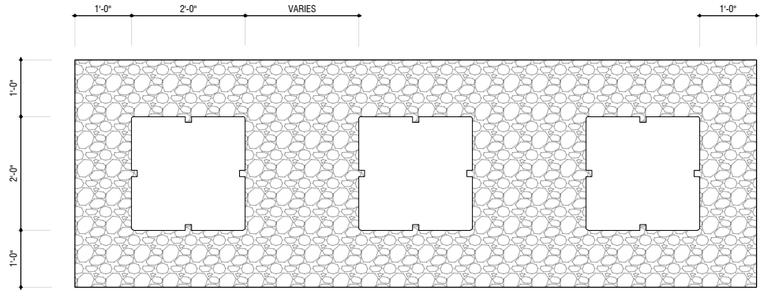

GROUP INSTALLATION
CONTINUOUS RIVER ROCK BUFFER BETWEEN BOLLARDS

PLAN VIEW

SCALE: 3/8" = 1'-0"

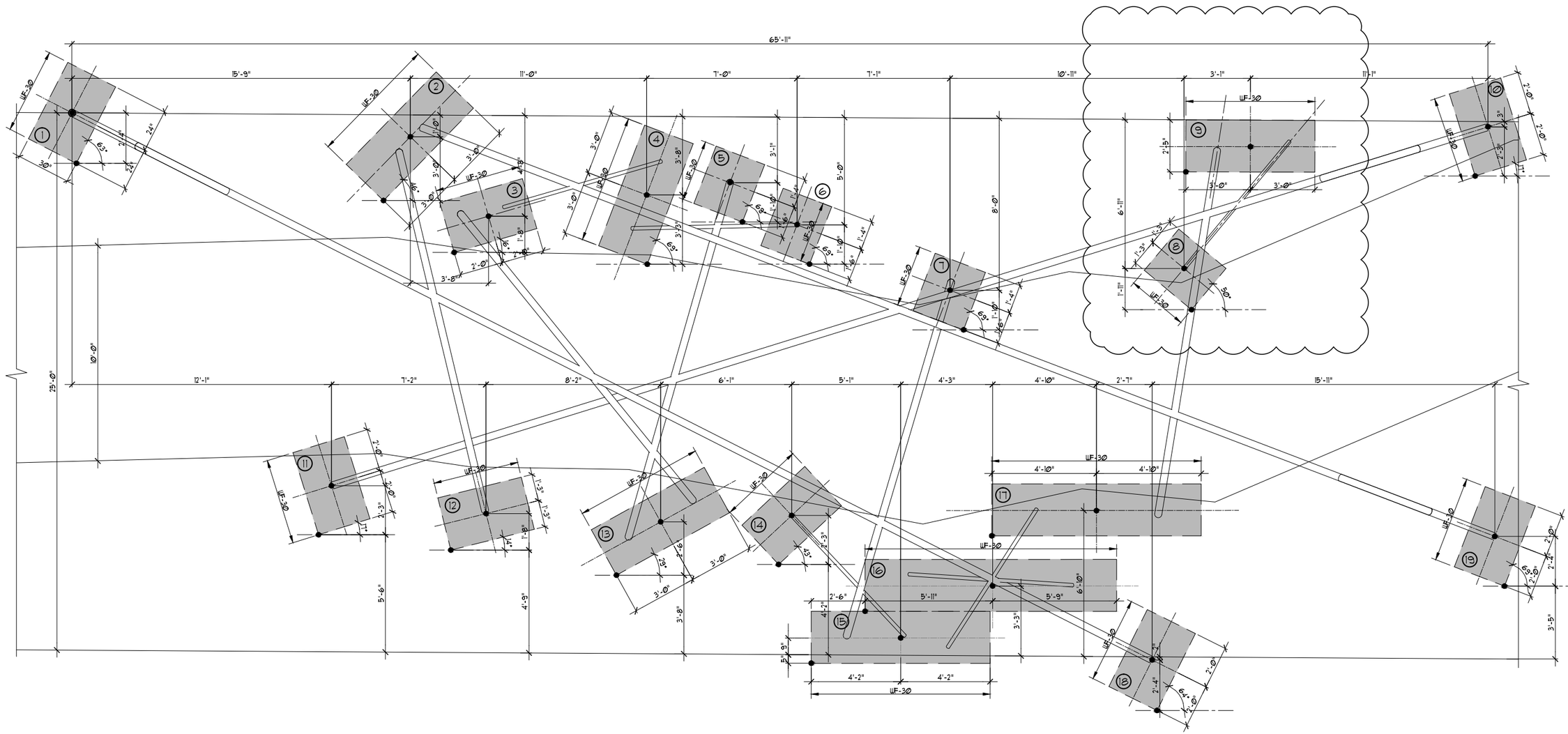

FOUNDATION PLAN

SCALE: 3/8"=1'-0"

FOUNDATION PLAN NOTES:

1. G. C. PROVIDE SOIL REPORT TO VERIFY ASSUMED 2000 PSF SOIL BEARING PRESSURE.
2. VERIFY AND COORDINATE ALL DIMENSIONS WITH ARCHITECTURE BEFORE COMMENCEMENT.
3. FOR BASE PLATE, SEE DETAIL 1/S-3.

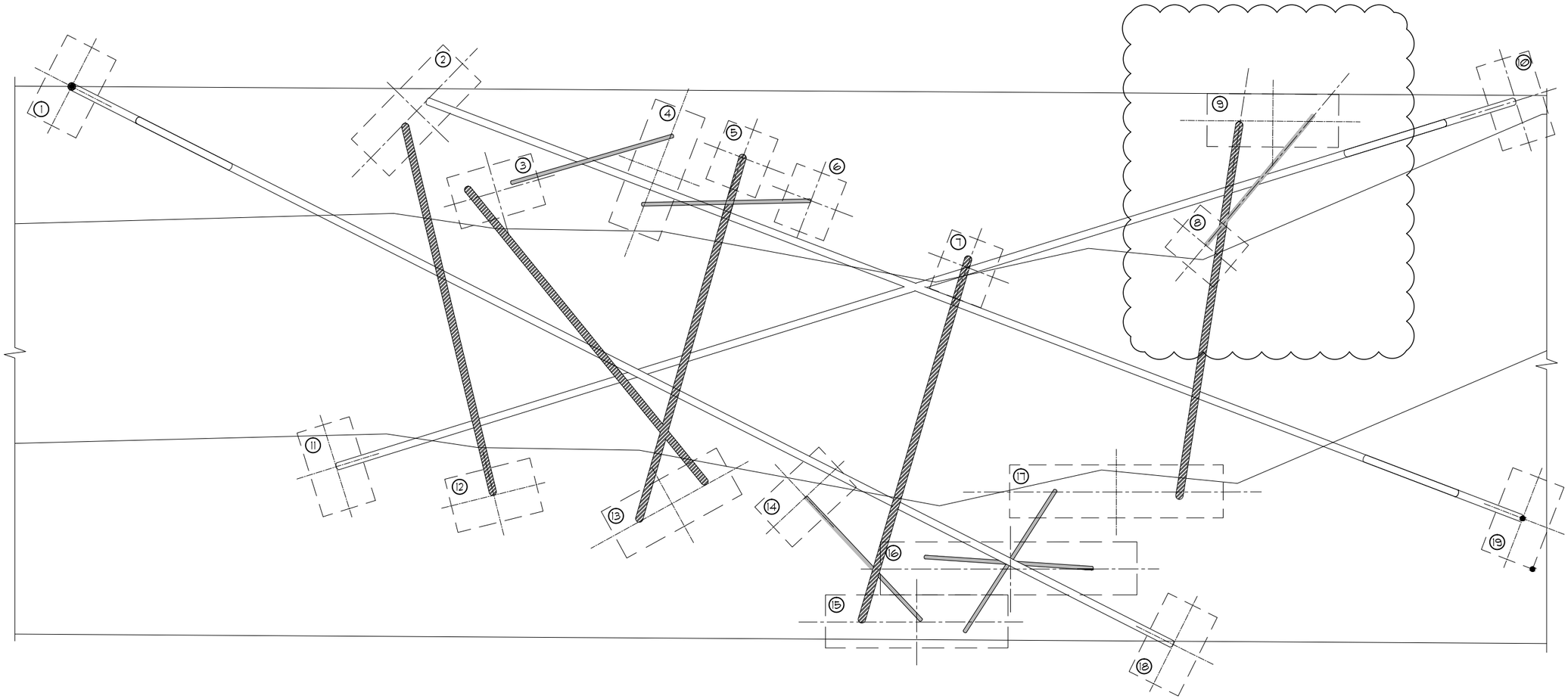

ALUMINUM FRAME PLAN

SCALE: 3/8"=1'-0"

FOUNDATION PLAN NOTES:

1. THE ALUMINUM CONNECTION TO BE WELDED ALL AROUND WITH 5/16" SIZE.

LEGEND:

- 4" DIAM NOMINAL PIPE - SCHEDULE 40
- 3" DIAM NOMINAL PIPE - SCHEDULE 80
- 2 ½" DIAM NOMINAL PIPE - SCHEDULE 80

GENERAL STRUCTURAL NOTES:

1. ALL WORK SHALL CONFORM TO FLORIDA BUILDING CODE 2017.
2. CONTRACTOR SHALL VERIFY ALL DIMENSIONS AND CONDITIONS IN THE FIELD PRIOR TO START OF WORK AND NOTIFY ARCHITECT/ENGINEER OF ANY DISCREPANCY IN THE DRAWINGS AND OBTAIN HIS APPROVAL BEFORE PROCEEDING WITH WORK.
3. ALL ALUMINUM SHALL BE TYPE 6061-T6, UNLESS NOTED OTHERWISE (U.N.O.)
4. BOLTS & OTHER FASTENERS DIRECTLY IN CONTACT WITH ALUMINUM MEMBERS SHALL BE ALUMINUM, STAINLESS STEEL OR ELECTRO GALVANIZED STEEL
5. ALUMINUM PARTS SHALL BE WELDED WITH AN INERT-GAS SHIELDED ARC OR RESISTANCE WELDING PROCESS. FLUX WELDING IS NOT ALLOWED FILLER ALLOYS SHALL BE AS AMERICAN WELDING SOCIETY SPECIFICATIONS A5.60.-69, ALL WELDING SHALL BE PERFORMED BY CERTIFIED WELDERS.
6. DURING ERECTION, ALUMINUM STRUCTURES SHALL BE ADEQUATELY BRACED FASTENED TO RESIST DEAD, WIND AND ERECTION LOADS.
7. ALUMINUM IN CONTACT WITH NON-COMPATIBLE METALS SUCH AS STEEL SHALL BE PROTECTED AS PER FBC 2003.B.4.2.
8. ALUMINUM IN CONTACT WITH WOOD SHALL BE PROTECTED WITH TWO COATS OF ALUMINUM METAL-AND-MASONRY PAINT.
9. WIND DESIGN CRITERIA ALL STRUCTURAL ELEMENTS, EXPOSED TO WIND, HAVE BEEN DESIGNED PER THE GUIDELINES OF THE ASCE 7-10 BUILDING CODE.

   V = 175 MPH

   I = 1.0

   EXP. "D"

FOOTING SCHEDULE			
MARK	SIZE	REINFORCEMENT	REMARKS
WF-30	30" x 14"	5 @ 8" c/c EACH WAY BOTTOM	
NOTE: FOR CONCRETE FOTING USE f'c=3000 PSI			

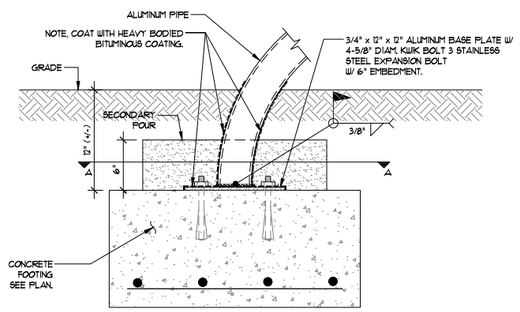

FOOTING DETAIL (1 / S-3)
SCALE: 1 1/2"=1'-0"

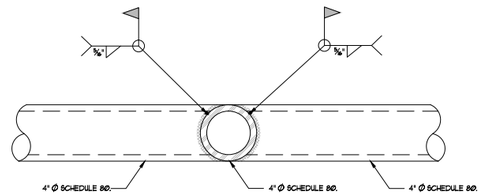

4" TO 4" CONNECTION DETAIL (1 / S-4)
SCALE:3"=1'-0"

ALUMINUM PIPE DIMENSIONS AND PROPERTIES													
NOMINAL PIPE SIZE	SCHED No.	OUTSIDE DIAMETER in.	INSIDE DIAMETER in.	WALL THICKNESS in.	AREA A $in.^2$	WEIGHT lb/ft	I $in.^4$	S $in.^3$	Z $in.^3$	r in.	J $in.^4$	Rb/t	
2 ½"	40	2.875	2.469	0.203	1.70	2.00	1.53	1.06	1.45	0.947	3.04	6.6	
3"	80	3.500	2.900	0.300	3.02	3.55	3.89	2.23	3.08	1.14	7.72	5.3	
4"	80	4.500	3.826	0.337	4.41	5.18	9.61	4.27	5.85	1.48	19.1	6.2	

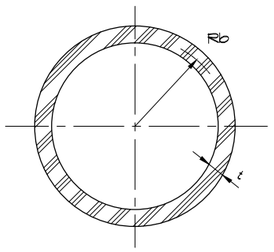

SECTION PIPE
SCALE: 1/4"=1'-0"

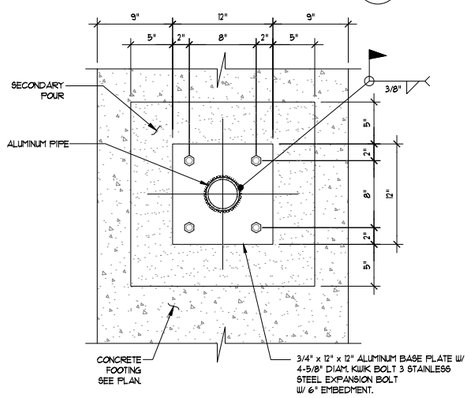

BASE PLATE
SECTION A-A
SCALE: 1 1/2"=1'-0"

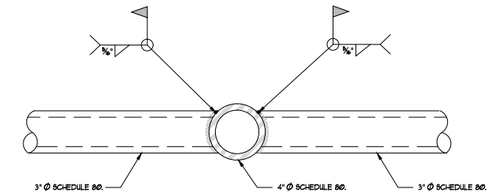

3" TO 4" CONNECTION DETAIL (2 / S-4)
SCALE:3"=1'-0"

SIGNAGE WIND LOAD REQUIREMENTS

1609.1 Applications.
Buildings, structures and parts thereof shall be designed to withstand the minimum wind loads prescribed herein. Decreases in wind loads shall not be made for the effect of shielding by other structures.

All exterior wall coverings and soffits shall be capable of resisting the design pressures specified for walls for components and cladding loads in accordance with Section 1609.1.1. Manufactured soffits shall be labeled in accordance with Section 1710.9 of this code.

1609.1.1 Determination of wind loads.
Wind loads on every building or structure shall be determined in accordance with Chapters 26 to 30 of ASCE 7 or provisions of the alternate all-heights method in Section 1609.6. Wind shall be assumed to come from any horizontal direction and wind pressures shall be assumed to act normal to the surface considered.

Exceptions:

1. Subject to the limitations of Section 1609.1.1.1, the provisions of ICC 600 shall be permitted for applicable Group R-2 and R-3 buildings.

2. Subject to the limitations of Section 1609.1.1.1, residential structures using the provisions of AF&PA WFCM.

3. Subject to the limitations of Section 1609.1.1.1, residential structures using the provisions of AISI S230.

4. Designs using NAAMM FP 1001.

5. Designs using TIA-222 for antenna-supporting structures and antennas, provided the horizontal extent of Topographic Category 2 escarpments in Section 2.6.6.2 of TIA-222 shall be 16 times the height of the escarpment. Design using this standard shall be permitted for communication tower and steel antenna support structures.

6. Wind tunnel tests in accordance with Chapter 31 of ASCE 7.

7. Wind loads for screened enclosures shall be determined in accordance with Section 2002.4.

The wind speeds in Figures 1609A, 1609B and 1609C are ultimate design wind speeds, Vult, and shall be converted in accordance with Section 1609.3.1 to nominal design wind speeds, Vasd, when the provisions of the standards referenced in Exceptions 1, 3, 4 and 5 are used unless the wind provisions in the standards are based on Ultimate Wind Speeds as specified in Figures 1609A, 1609B, or 1609C or Chapter 26 of ASCE 7.

1609.1.1.1 Applicability.
The provisions of ICC 600 are applicable only to buildings located within Exposure B or C as defined in Section 1609.4. The provisions of ICC 600, AF&PA WFCM and AISI S230 shall not apply to buildings sited on the upper half of an isolated hill, ridge or escarpment meeting the following conditions:

1. The hill, ridge or escarpment is 60 feet (18 288 mm) or higher if located in Exposure B or 30 feet (9144 mm) or higher if located in Exposure C;

2. The maximum average slope of the hill exceeds 10 percent; and

3. The hill, ridge or escarpment is unobstructed upwind by other such topographic features for a distance from the high point of 50 times the height of the hill or 1 mile (1.61 km), whichever is greater.

SIGNAGE WIND LOAD REQUIREMENTS

All signs must meet 125 MPH wind load design requirements of the Florida Building Code.

1608.3 Ponding instability.
Susceptible bays of roofs shall be evaluated for ponding instability in accordance with Section 7.11 of ASCE 7.
SECTION 1609 WIND LOADS

FIGURE 1609A
ULTIMATE DESIGN WIND SPEEDS, VULT, FOR RISK CATEGORY II BUILDINGS AND OTHER STRUCTURES

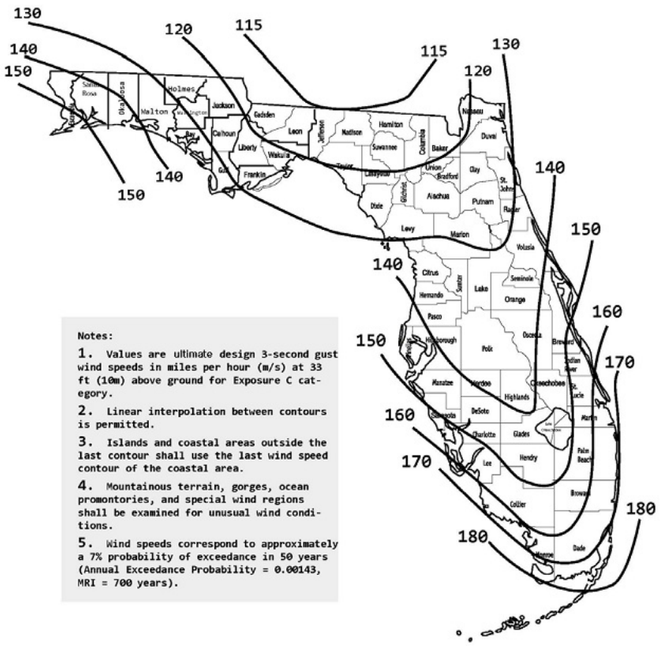

Notes:

1. Values are ultimate design 3-second gust wind speeds in miles per hour (m/s) at 33 ft (10m) above ground for Exposure C category.
2. Linear interpolation between contours is permitted.
3. Islands and coastal areas outside the last contour shall use the last wind speed contour of the coastal area.
4. Mountainous terrain, gorges, ocean promontories, and special wind regions shall be examined for unusual wind conditions.
5. Wind speeds correspond to approximately a 7% probability of exceedance in 50 years (Annual Exceedance Probability = 0.00143, MRI = 700 years).

FIGURE 1609B
ULTIMATE DESIGN WIND SPEEDS, VULT, FOR RISK CATEGORY III AND IV BUILDINGS AND OTHER STRUCTURES

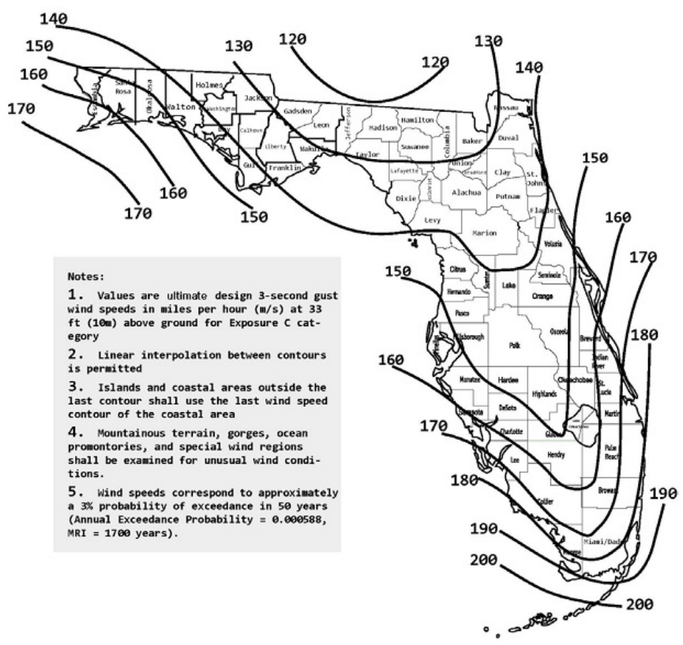

Notes:

1. Values are ultimate design 3-second gust wind speeds in miles per hour (m/s) at 33 ft (10m) above ground for Exposure C category
2. Linear interpolation between contours is permitted
3. Islands and coastal areas outside the last contour shall use the last wind speed contour of the coastal area
4. Mountainous terrain, gorges, ocean promontories, and special wind regions shall be examined for unusual wind conditions.
5. Wind speeds correspond to approximately a 3% probability of exceedance in 50 years (Annual Exceedance Probability = 0.000588, MRI = 1700 years).

FIGURE 1609B
ULTIMATE DESIGN WIND SPEEDS, VULT, FOR RISK CATEGORY III AND IV BUILDINGS AND OTHER STRUCTURES

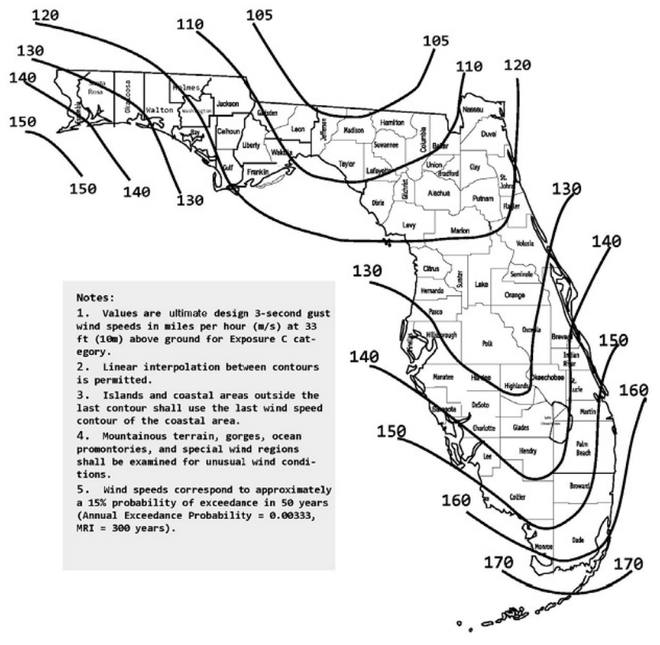

Notes:

1. Values are ultimate design 3-second gust wind speeds in miles per hour (m/s) at 33 ft (10m) above ground for Exposure C category.
2. Linear interpolation between contours is permitted.
3. Islands and coastal areas outside the last contour shall use the last wind speed contour of the coastal area.
4. Mountainous terrain, gorges, ocean promontories, and special wind regions shall be examined for unusual wind conditions.
5. Wind speeds correspond to approximately a 15% probability of exceedance in 50 years (Annual Exceedance Probability = 0.00333, MRI = 300 years).

GENERAL RSM DESIGN SIGNAGE SPECIFICATIONS

November 2018

These general specifications addressing signage and graphic elements within the attached package are intended for the signage fabricator, and are a supplement and subservient to the general project specifications provided by the Owner, developer, or architect of record. The sign fabricator is responsible for obtaining and complying with the referenced general project specifications in addition to these signage specifications.

This document has been assembled by RSM Design with the expectation that the sign fabricator will meet the following quality and performance requirements. The acceptance of these drawings by the sign fabricator constitutes agreement to comply with the following conditions. The Owner will hold the sign fabricator to these requirements as part of their contract obligations.

I. INDEMNITY

These signage drawings are for design purposes only and are not intended to be used for construction. Anyone who uses these designs for construction does so at their own risk. Owner, and Owner's agents, servants and employees who use these designs ("Indemnitors") agree to indemnify and hold RSM Design, its officers, directors, agents, servants and employees ("Indemnitees") harmless from any and all claims, liability, cost, losses, damages, recovery and expenses (including attorney's fees, court costs and expert witness fees) incurred by Indemnitee arising from any claims involving these designs or any other work done by Indemnitee.

The following package represents the signage and graphics scope as understood by RSM Design throughout the design process and at the time of issuance. RSM Design cannot be held responsible for alterations, changes, value engineering, and other modifications made to the signage scope and fabrication methods without the inclusion of and consent of RSM Design prior to fabrication and installation.

With the acceptance of this package by the Owner, developer, and/or architect of record, all of the designs represented in this package have been reviewed (and approved unless RSM Design is notified otherwise) by the architects of record and the client for original design intent, placement, appropriateness, and functionality.

All location plans and location elevations represented in this package may not be representative of the existing built conditions. The sign fabricator is responsible for verifying all existing conditions (dimensions, backing, accessibility, electrical accessibility, other conditions) prior to fabrication and installation.

Conflicts / Contradictions with Drawings or Existing Conditions

The contractor should recognize and bring to RSM Design any conflicts or contradictions either in regards to these drawings or existing conditions or as they relate to other disciplines or contractors. All conflicts should be described in writing and the sign fabricator is to provide alternative solutions to resolve the conflict. All conflicts are to be resolved and any changes approved by RSM Design and client prior to sign fabrication.

Roles and Responsibilities

RSM Design's role on this project is for the design intent and aesthetic look of each sign and in coordination with the overall project design team. The sign fabricator is responsible for all structural, mechanical, fabrication, details of the signs (venting, waterproofing, safety, etc.), Engineering of the signs construction coordination, and installation of all signs. The sign fabricator is responsible for meeting all local and national codes, ordinances, and laws associated with these designs and their construction documentation.

Sign fabricator to inform owner, developer, general contractor, and RSM Design that the sign package has been submitted to the local governing municipality or city for review and plan check, and any variances have been approved for the signs.

General Notes

1. It is the sign fabricator's and installers responsibility (when in scope) to:

   a. Remove all existing signs as noted and dispose of them legally.

   b. Patch and repair any damage to wall surfaces and surrounding finished floor, at or adjacent to sign, caused by removal of existing sign.

   c. Remove Legal, Warning, Code Required or ADA signs only when replacement sign is to be installed; and temporary sign(s) to be provided as needed for safety measures.

   d. Advise RSM Design of any existing signs not accounted for in RSM Design's sign package.

2. Sign fabricator to verify all locations and conditions prior to fabrication and notify RSM Design of any changes or conflicts within the design package.

3. Sign fabricator to have signed approval on all final sign messaging and locations with client or general contractor prior to fabrication. RSM Design to be notified of any changes or comments.

4. Renderings in RSM Design's package are illustrative and conceptual in nature; measured, dimensioned drawings, and messages in this document govern.

5. All exterior signs to have appropriate water proofing and weep holes to discharge any internal moisture. Signs must contain internal light baffles to shield any light leakage coming from weep holes or seams.

6. Sign fabricator to detail and provide all necessary mechanical or non-mechanical ventilation for signs (exterior and interior) to keep signs from overheating or condensation building up. If vents or ventilation devices alter the design intent, RSM Design is to be notified prior to fabrication.

7. Sign fabricator is responsible for all engineering of internal structure, engineered connections, mounting assemblies and foundations.

8. Where signs will be anchored to concrete, sign fabricator to provide steel plate with epoxy set anchors (xray to avoid existing rebar). Where signs will be located on brick, locate anchors at grout where brick occurs and tie into existing concrete. (Per engineeering)

9. Sign fabricator's drawings to be based off of their original documentation and drawings, and are not to be "copies" of or re-formatting of RSM Design's original design drawings.

10. Sign fabricator is responsible for securing and paying for all permits, insurances, inspections and tests required by governmental agencies.

11. Sign fabricator is responsible for verifying and ensuring compliance with all ADA, OSHA, Fire Department, environmental regulations and all other applicable governing code requirements.

12. RSM to provide typical design ONLY for evacuation maps, it is the responsibility of the sign fabricator to verify and design all remaining maps required prior to submitting to the fire authority for approval.

13. RSM to provide typical design ONLY for directory maps, it is the responsibility of the sign fabricator to verify and design all remaining maps required prior to submitting to the client and RSM for approval.

14. All mock-ups to be produced and submitted in a timely manner to allow ample time for review and changes (if needed) to meet all fabrication and installation schedules.

II. PERFORMANCE INFORMATION NON-DISCLOSURE AGREEMENT

All ideas, designs, arrangements, and plans indicated or presented by these drawings are owned by and are the property of the Redmond Schwartz Mark Design, Inc. (RSM Design) and the project Owner, and were created, evolved, and developed for use on and in connection with the specified project ONLY. These designs and details cannot be used on any other project. None of such ideas, designs, arrangements or plans shall be used by or disclosed to any persons, firm, or corporation for any purpose whatsoever without the written permission of Redmond Schwartz Mark Design Inc. and the Owner. Any and all inquiries in this regard by outside parties should be referred to RSM Design. It is required that all original artwork furnished by RSM Design be returned upon completion of this project.

For the purpose of this package and these specifications, the term "Contractor" shall mean sign fabricator or sign contractor and the term "sign" shall refer to any fabrication, object, or article of graphics or furniture described in these drawings and/or specifications. The acceptance of these drawings by contracted general contractors, vendors, bidders, sign fabricators, or sub-contractors and their agents constitutes agreement to all of the following conditions outlined in these specifications.

III. DESIGN INTENT AND SHOP DRAWINGS

A. Details on drawings indicate a design approach for sign structures but do not necessarily include all fabrication details required for the complete structural integrity of the signs. It shall be the responsibility of the contractor to perform the complete structural design of the signs and to incorporate all the reasonable safety factors necessary to protect the Owner, general contractor, and RSM Design against public liability. Sign fabricator also to be responsible for the detailing and inclusion of all necessary water proofing, proper ventilation devices, and internal lighting specifications in their shop drawings.

B. Fabrication and installation design: Unless otherwise directed by Owner, design to withstand severe public abuse, souvenir theft or vandalism, but not less than equivalent of resisting simple hand implements and tools (screwdrivers, knives, coins, keys, and similar items), and adult physical force for approximately 10 minutes. All fabricated signs shall also be built to withstand normal maintenance operations used by employees/staff.

C. Electrical Design: Contractor shall specify all internal and external electrical and internal lighting components to be used to illuminate sign elements. Major, large scale elements may require the involvement of a licensed lighting designer at the sole cost of the Owner. Final coordination of fixture type, lamping, quantity and locations to take place between Contractor, general contractor, and Owner, as well as selected lighting designer for suitability in attaining desired appearance and/or effect.

a) Actual installation of lighting fixtures not contained within the sign element(s) must be performed by a licensed electrical contractor or equivalent for the location of the project.

b) Sign connection to existing electrical power on site, if more than (6) feet from sign element(s), must be performed by a licensed electrical contractor. Sign fabricator to coordinate necessary electrical requirements and locations with the general contractor.

c) When requested by the Owner and RSM Design, lighting mock-up(s) shall be provided using the specified fixtures or lamps, either in-shop review, or on-site evaluation, to determine the effectiveness of the desired lighting scheme and to the approval of the Owner.

d) If required, sign fabricator to submit calculations signed by a registered professional lighting engineer in the area or country of the project to Owner for review.

e) Sign fabricator to submit certification of conformance to UL (or similar in the area or country of the project) requirements for sign construction.

D. Resulting working drawings, shop drawings, and contract documents including permit documents are the sole responsibility of the Contractor in every respect. Contractor is responsible for obtaining all permits in the area, local municipality, or country of the project's location.

E. RSM Design will review the submitted shop drawings only for conformance with general design intent, and will in no way be responsible or liable for any results of construction from approved working drawings, material selection, shop drawings, contract documents or any other agreements other than agreement with the Owner authorizing these documents.

F. Sign fabricator to submit shop drawings for review and approval obtained by RSM Design and Owner prior to any fabrication begins. Should fabrication that has begun and might need to be changed prior to obtaining approval of shop drawings, sign fabricator to assume all costs associated with the changes.

G. Sign fabricator to make corrections to and resubmit any shop drawings not approved.

IV. QUALITY ASSURANCE

A. Quality of Workmanship.

The Contractor shall be responsible for the quality and delivery of all materials, and workmanship required for the execution of the contract including the materials and workmanship of any firms or individuals who act as his or her subcontractors. It is desired that the Contractor for work of this type shall have in-house, broad knowledge, diverse shop and field experience, flexibility, coordinating ability, skilled craftsmen, and physical labor as necessary as well as facilities to produce quality products. Contractor shall be responsible for providing subcontractors with complete and up-to-date drawings, specifications, graphic schedule and other information issued by RSM Design.

B. Performance.

The contractor shall base his or her proposal on the performance of all services, including all items of labor, material and equipment required for the complete fabrication and installation of the specified work (and these specifications) within the time frame agreed to by Contractor, Owner, and RSM Design.

C. Dimensions.

Written dimensions on the drawings shall take precedence over scaled dimensions. Contractor shall verify and be responsible for all dimensions and conditions shown by these drawings as they relate to actual material sizes, existing construction and related site conditions. If there are discrepancies with dimensions or materials, it is the responsibility of the Contractor to bring it to RSM Design's attention before fabrication for any clarifications deemed necessary.

D. Sign Package Graphics Schedule.

Copy, quantities and references shown on the included Graphics Schedule shall take precedence over drawings. Specification shall take precedence over the large-scale details. The large-scale details shall take precedence over the smaller-scale drawings. If there are discrepancies it is the responsibility of the Contractor to bring it to RSM Design's attention before fabrication for any clarifications deemed necessary.

E. Execution.

In the case of discrepancies, in quantities, dimensions, message, or any other related elements Contractor is to notify RSM Design before proceeding further in any operation, in order to resolve the issues in question. It is required that the Contractor not attempt to resolve the discrepancies without consulting RSM Design.

F. Contractor Recommendations.

The Contractor shall carefully study the detailed drawings for the various signs and make specific recommendations and changes if those changes will improve the quality of any sign. Such recommendations and changes shall be approved in writing by RSM Design or their technical representative prior to preparation of shop drawings or fabrication of any samples of signs. The Contractor is responsible for including industry standard details in their shop drawings, whether indicated in RSM Design's design drawings or not…..items

such as proper venting (mechanical or natural), water proofing, foundations details, weep holes, access panels, etc. It is the Contractor's responsibility in the production of the shop drawings for construction to accommodate for all necessary local code required conditions and sign detailing that will promote the long life and ease of maintenance of the signs.

G. Artwork.

Mac based generated electronic artwork as required by the Contractor for signs, symbols, and custom designed graphic components (i.e. logos, logo types, arrows, or patterns) will be provided in latest version of Adobe Illustrator (otherwise specified) at a scaled percentage of the final size. A high resolution appropriate art or graphic scan will be provided when necessary for non-vector based graphics. All required copy message layouts and text for project signage system is the responsibility of the sign Contractor. All enlarging and reducing is the responsibility of the sign Contractor. Contractor shall submit an itemized list of all required artwork at time of bid prior to generating shop drawings. Note: Any artwork required beyond electronic computer artwork noted above (i.e. additional custom copy layouts, formatting for other platforms or file types, AutoCAD files, service bureau output, or copying to other media, etc.) will be billed to the Contractor on a time and materials basis by RSM Design. RSM Design cannot provide copies of licensed fonts, it is the responsibility of the sign fabricator to purchase all needed project fonts.

H. UL (or similar) Compliance.

Complete Underwriters Compliance (for the United States) or approved recognized testing agency (for other countries), compliance, as required, is the responsibility of the Contractor. Contractor shall provide lighting fixtures and electrical components that meet all UL (or similar) testing lab requirements for safety, operation, construction and are UL-labeled and listed.

J. Lighting.

All lighting fixtures/sources shall emit a color balanced, consistent and uniform light void of hot or cold spots.

K. Electrical Hardware.

All transformers/power supplies and electrical hardware shall be concealed, non-audible and non-visible to pedestrian and vehicular traffic. Provide disconnect switch as required by local or international governing agencies. Confirm with Owner and general contractor the necessity or desirability of light sensor switches, day-night circuit connections, local restrictions on night time area lighting or other conditions that could affect the use and operation of any sign illumination.

L. Labeling.

There shall be no visible labels, manufacturer's or otherwise, code permitting, on the completed signs. If labels are required, intended location along with an explanation of the requirements must be submitted for review to RSM Design and the Owner, prior to application and/or installation. No visible sign fabricator company labels or stickers are permitted.

M. Stock.

All material, hardware, electrical components, finishes, etc. used to fabricate any and all sign components shall be "NEW" (not previously used or operated in any other application) and from the most recent original manufacturer's production run/supply and appropriately matched to the service conditions required of the site.

N. Testing.

Contractor is required to provide Owner with a copy of all testing inspection reports as may be required by local or international codes. An independent testing lab may be hired by the Owner to do inspection and material testing. Contractor is not to proceed with fabrication until all unsatisfactory conditions have been corrected by the Contractor in a manner acceptable to the Owner.

V. SUBMITTAL

A. Shop Drawings.

The Contractor shall submit a digital 11"x17" PDF file of detailed shop drawings to client and RSM Design for review prior to the start of any fabrication. In general, Shop Drawings should include all things that are pertinent to the appearance of the sign and the functionality/structural integrity of the sign and its attachment. To that end they should include but are not limited to:

1. Material callouts 2. Paint & finish callouts 3. Material / fabrication notes 4. Identify all welds, mechanical fastener, mounting techniques 5. Sections through all internally illuminated elements 6. Sections through all sign elements showing internal structure 7. Details of all mounting points. 8. Specifications for all illumination & color temperature used for lighting. 9. Location of any access panels 10. Location and detailing of any necessary cut-off electrical switches 11. Indication of all weep holes with internal light baffels 12. Engineering documents for any large scale signage structural members 13. Final layout of all copy 14. Seam locations 15. Fastener types (tamper proof), visible or hidden 16. Blocking requirements 17. Venting 18. Joint details 19. Electrical requirements 20. Lighting details with spec sheets 21. Foundation details

Without these details, RSM Design does not have the ability thoroughly review and understand the fabrication methods, level of quality or the fabricators level of understanding of RSM Design's intentions. The GC/architect also needs this information to coordinate their work including power requirements, blocking, attachments, etc. and connection to support structure or mounting surface, whether shown or discussed in RSM Design's drawings or not. Shop drawings and data shall be reviewed by RSM Design with such promptness as to cause no delay in the work. The Contractor shall make all corrections required by RSM Design and resubmit for final review. Shop drawings for all signs must be approved by RSM Design and the General Contractor or Owner before the start of fabrication.

B. Conflicts/Contradictions w/ Drawings or Conditions.

The contractor should recognize and bring to RSM any conflicts or contradictions either in regards to the drawings or as the drawings relate to other disciplines or contractors. All conflicts should be described in writing and the Contractor is to provide alternative solutions to resolve the conflict. All conflicts are to be resolved and any changes approved by RSM Design and Owner prior to sign fabrication.

C. Product Data.

The Contractor shall submit manufacturer's technical data and installation instructions for each type of sign and/or fixture required as will be provide in the completed, installed sign unit. Identification of all materials used, by manufacturer's descriptive literature, control number, name, code number, batch and formula when available shall be provided by the Contractor. All materials used and specified are the responsibility of the Contractor. Any materials indicated or specified in RSM Design's drawings must be approved of by the Contractor for availability, warranty, appropriateness, compatibility with other materials, etc. If Contractor has any concerns about any materials suggested or specified by RSM Design in their design intent drawings, Contractor to inform RSM Design in writing prior to fabrication or take on full responsibility for use of specified material.

D. Specific Samples and Mock-ups

Fabricator shall submit 3 (three) set of sample and/or prototypes of each material, paint and vinyl call out listed on this sheet, minimum size 8"x 8" in size. All paint spray outs must be on aluminum. Samples must be submitted to RSM in a time frame allowable for review of material, color and aesthetic compatibility to any existing adjacent materials. RSM will review the samples and send one set back to the fabricator, one set to the client team and keep one set as control samples throughout the fabrication process. If a color or material is not approved, the Fabricator must re-submit a new sample until it is approved by the team prior to fabrication. It is strongly encourages that all color and material samples be submitted to RSM Design when shop drawings are submitted for review. Compliance with all other requirements is the exclusive responsibility of the Contractor. All project mock-ups per mock-up schedule or additional request by RSM or client need to be approved prior to fabrication of all final signs. When specified furnish full-size samples of sign materials. Contractor to resubmit all samples and mock-ups as requested until all RSM Design, general contractor, and Owner specifications are met and approved. All project mock-ups need to be approved prior to fabrication of all final signs.

E. Structure.

Installation, engineered internal structure, engineered mounting assemblies and engineered foundations are by Contractor and are to adhere to design intent of RSM Design, if specified. Contractor to coordinate and provide architect of record and general contractor with drawings indicating placement and structural requirements for architectural backing. Contractor shall submit two (2) sets of prints and one digital set of comprehensive engineering drawings to RSM Design incorporating an adequate foundation and/or mounting structure for all sign components to meet all load and wind requirements and given site conditions. The Contractor shall, at his or her expense, submit to general contractor for distribution and review, calculations, sealed by certified engineers registered in the state or country of final installation, for all structural members including foundations.

F. Custom Fabricated Items.

The Contractor is to submit shop drawings of all custom fabricated items and specifications on all standard pre-manufactured items.

G. Electrical Requirements.

The Contractor shall provide, within 30 days of the award of contract, the specific electrical requirements to the Owner and/or general contractor.

H. Light Service.

The Contractor shall provide the general contractor or Owner with complete lighting or LED replacement information, brand, type, wattage, color, etc., for all lighted components. This information shall be in a digital format and shall indicate at least one local area (site) supplier.

J. Special Conditions.

The Contractor shall provide RSM Design and the Owner with specifications and recommendations to provide a magnetic force field around all signs that will protect the signs from all damage. Please email RSM Design upon receipt of and acknowledgement of this "Special Condition" so that RSM Design can remove it from the final bid / award package. Thank you.

K. Maintenance.

The Contractor shall provide the Owner with complete finish/component care instructions as specified by the manufacturer for on-going sign cleaning and maintenance. Three (3) sets are to be submitted. Contractor to provide Owner with one (1) gallon or one (1) liter (unopened and clearly marked) of each paint color/finish used on the project.

L. Copy / Text / Messaging Layouts.

The Contractor shall provide RSM full size or half size black and white prints on bond paper of messaging/layouts required for all signs prior to fabrication. Layouts must be submitted to RSM Design in a time frame allowable for review and approval without delay to the project. RSM Design is not responsible for correct adherence to code, copy information or location of signs. City, County, State, or Country sign requirements supersede information shown in the RSM Design sign designs.

VI. FINISHES

A. Colors and Surface Textures.

All colors shall match exactly the color and finish specifications provided by RSM Design. Exercise care to assure that finished surfaces are unblemished in the completed work. For exposed signage, materials with applied colors or other characteristics related to appearance, Contractor shall provide color matches indicated, or if not indicated, as selected and reviewed by RSM Design.

B. Surface Preparation.

All surfaces shall be thoroughly cleaned and free from dust, dirt, rust, scale, mill scale, oil, greasy materials or residue from cleaning. Except as indicated or directed otherwise, finish all surfaces smooth. All coatings shall be applied in strict accordance with the manufacturer's recommendations. All paint products shall conform to local codes. All finished pieces shall present a uniform opaque color appearance unless specifically indicated otherwise by RSM Design.

C. Painted Finish.

1. Ferrous Surfaces

Using Matthews paint products (or similar quality), finish with 1 coat 74-734 & 74-735 Metal Pretreat @ .25 mils DFT, 1 coat Matthews Acrylic Polyurethane 1 mil Dft (min.). Observe designer's specification regarding specularity (matte to gloss). If Matthews paints are not available, Contractor to use similar and submit to RSM Design for approval prior to fabrication.

2. Aluminum

Using Matthews paint products finish (or similar quality), with 1 coat 74-734 / 74- 735 Metal Pretreat @ .25 mils DFT or 1 coat 74 793 Spray Bond @ .15 to .25 mils DFT and 1 coat Matthews Acrylic Polyurethane 1 mil DFT (min). Matthews paints are not available, Contractor to use similar and submit to RSM Design for approval prior to fabrication.

3. Bright Metals

Match finish (polished, satin, brushed, etc.) detailed on drawing. If specified, coat with a non-yellowing polyurethane clear coat.

4. Plastic Surfaces

All plastic to be paint finished according to paint manufacturer's specifications.

D. Application.

All applications of color coatings are to be equal and of consistent cover with no "streaking", "spotting", "gradation" or other variations within and from each similar application.

E. Ultra-Violet/Fading Protection.

Contractor shall utilize materials, coatings and processes to minimize as much as possible any noticeable fading of pigmented coatings.

F. Neon Returns.

All exposed neon returns and double backs are to be opaque with a top coat to match the field area immediately behind that neon unless otherwise specified.

VII. MATERIALS

A. Acrylic / Color Translucent Sheet.

Where sheet material is indicated as a "color," provide color translucent sheet of density required to produce uniform brightness without halo-like effect. Material provided shall be appropriately matched to the intended permanent field conditions. Note: Where translucent material is called out as 'cast', 'formed' or 'molded' resin, acrylic or polycarbonate (i.e. 'Lexan', 'Tuffac', etc), the Contractor shall research and specify the optimum material and fabrication method for the desired finish and/or effect. Contractor shall provide samples of such materials as indicated on RSM drawings.

B. Acrylic/Transparent Sheet.

Where sheet material is indicated as "clear" provide colorless sheet in gloss finish, with light transmittance of 92% where tested in accordance with the requirements of ASTM D-1103 (or similar local or country standards).

C. Aluminum Sheet.

Provide aluminum sheet (Not less than .125) of alloy and temper recommended by the aluminum producer or finisher for the type of use and finish indicated and with no less than the strength and durability properties specified in ASTM B-109 for 5005-H15 (or similar local or country standards).

D. Aluminum Extrusion.

Provide aluminum extrusion of alloy and temper recommended by the aluminum producer or finisher for the type of use and finish indicated and with not less than the strength and durability properties specified is ASTM B- 221 for 6063-T5 (or similar local or country standards).

E. Structural Steel.

Contractor to coordinate with Architect of Record all internal structural steel support as required, to meet the requirements of the permanent installation. Contractor to provide architect of record and general contractor with drawings indicating placement

F. Fasteners.

Unless otherwise indicated, provide concealed fasteners fabricated from metals that are non-corrosive to either the signage materials or the mounting surface. Where screw-heads are necessarily visible, they shall be indicated on all shop drawings, be a flush mounted "allen-head" or tamper proof, and be 'painted out' to match the adjacent surface.

G. Vinyl Machine-Cut Copy.

Vinyl machine-cut copy shall be of 3M Scotchcal brand film or other quality product with provable identical performance specifications and warranty conditions. Any vinyl other then 3M must be submitted to RSM Design for review and approval prior to fabrication.

H. Paint.

Paint shall be manufacturer's highest grade for best ultraviolet light resistance, weather-ability and overall longevity of finish and color. Paint shall have a written warranty against premature fading and be approved by RSM Design prior to construction. Prior to close-out, Contractor shall turn over to Owner (3) copies of complete paint schedule indicating colors used on each sign type.

I. Engineering and Wind Loads.

Signs should be detailed and engineered by selected sign Contractor to withstand severe wind loads in potential hurricane or wind storm conditions; engineering should comply with local sign and building code requirements and calculations and drawing should be submitted with shop drawings for review.

VIII. FABRICATION

Intent of Specifications: It is intended that all finished work be of highest quality to pass eye-level examination and scrutiny by RSM Design and the Owner. Contractor to be responsible for all signage engineering; as such Contractor is to assume responsibility for coordinating with the various team members (including general contractor, lead architect of record, landscape architect, and RSM Design) all final locations of sign types, as well as necessary footings and foundations and blocking as may be necessary within walls.

Contractor is responsible for coordinating with general contractor all electrical power requirements and connections to all applicable sign locations.

A. Copy Application.

All sign copy shall be crisp, sharp, clean, and free from "ticks," discontinuous curves, line waver, and similar type of imperfections.

1. Sign copy to comply with the requirements indicated for size, proportion, style, spacing, content, position, material, finish and color of letters, numbers, symbols and other graphic devices.

2. All letter forms shall be aligned so as to maintain a baseline parallel to the sign format, with margins and layout as indicated on design drawings and approved shop drawings.

3. Silk-screening copy: Finish sheen of copy to match sheen of copy panel background (gloss, semi-gloss, or sheens between). Edges of letters shall be straight and corners sharp. Surfaces of letters shall be uniform in color, finish and free from pinholes and other imperfections.

4. Routed copy: Letter forms with nicked, ragged, larger than 1/8" diameter rounded (positive or negative) corners, and similar disfigurements will not be acceptable. Letters, Graphics and Logos that require corners to be sharp and true should be Water Jet or Lasered cut. Letter forms shall be aligned so as to maintain a base line parallel to the sign format, with margins and layout as indicated on RSM Design's design drawings and approved shop drawings. Vertical strokes shall be plumb. Mechanically fasten center of letters to acrylic plastic as required.

B. Illumination.

Illuminate units in the manner indicated using the manufacturer's standard lighting components including fixtures, transformers, insulators and other components. Make provision for servicing and for concealed connection to the building system. Coordinate the electrical components of signs with those of the power supply provided.

C. Signage / Cabinet.

1. Details shown on the drawing shall be followed for exterior appearance only. Structural design shall utilize unitized, self supportive framing. Fabricate cabinet, exposed faces and graphic devices to size and style indicated and produce surfaces free from oil canning, warping, distortion or any irregularities or inconsistencies. Include internal bracing for stability and attachment of mounting accessories as required. Show location of lifting hooks as required.

2. Contractor may change interior construction shown on these details to conform with their shop practices and industry standards. However, these changes must be submitted as part of the shop drawings and be reviewed by RSM Design prior to fabrication.

3. Construct all work to eliminate burrs, cutting edges and sharp corners.

4. Qualifications: Welding must be performed by operators who are currently qualified by tests as prescribed in AWS D1.1, D1.2, or D1.3 (or similar), as applicable, and/or certified by a recognized building or code authority. Submit qualifying data and certification to Developer for approval. Welding must conform to the acceptable requirement of AWS D1.1, D1.2, and D1.3 and MPS 11-0099 (or similar in country of project).

5. Parts indicated to be turned must be accurately machined worked from solid stock to dimensions indicted or on approved shop drawings. Finished surfaces to be polished smooth unless otherwise indicated or directed by Developer, free of any visible pits, voids, or similar defects.

6. Make all signs tight fitting, between parts and sections, and with adjacent surfaces. Unless indicated otherwise, non-welded joints between various portions of signs must be weatherproof (for exterior signs) and have tight, hairline-type appearance, without gaps (varying or otherwise). Provide sufficient fastenings to preclude looseness, racking, or similar movement.

7. Conform with manufacturer's recommended fabricating procedures regarding fastening, restraining, expansion and contraction of dissimilar materials.

8. Isolate dissimilar materials. Exercise particular care to isolate non ferrous metals from ferrous metals, including fasteners.

9. Metal thickness: Provide metal thicknesses most appropriate for the fabrication conditions. These must all be called out in the shop drawings. RSM Design to be advised of any changes to specified dimensions.

10. It is the responsibility of the contractor to schedule reviews of signs in production with Owner for approval. Review meetings are to be scheduled at the convenience of the Owner.

11. All non-painted exposed metal to be stainless steel unless otherwise specified.

12. Signs to be assembled and mounted so as to provide reasonable ease of access and replacement of all components. ie: use conforming, accessible, but not visible fasteners where possible.

13. Should any substitutions of materials be suggested by the Contractor from what is specified in the design drawings, RSM Design and the Owner must be notified prior to and approved prior to fabrication.

14. Contractor responsible for the integration of all proper sign ventilation (natural or mechanical) to prevent overheating and condensation build up, and these details should be shown on the shop drawings and approved prior to fabrication.

D. Fastenings.

1. Fasteners on sign-face surface shall not be exposed, except where specifically noted.

2. Sign-face surfaces shall not be penetrated during fabrication or installation of signs, except where specifically noted.

3. Sign-face surface shall not be deformed, distorted, or discolored by attachment of concealed fasteners.

4. All fasteners shall be resistant to oxidation or other corrosive action completely through their cross sections.

5. Work shall be secured with fasteners of the same metal, color and finish as the components they secure where they are exposed to view.

E. Neon.

All exposed neon if used shall be installed in such a manner as to minimize double backs, exposed wires, etc. All exposed neon shall appear as a continuous line of light with no irregularities from section to section. Contractor shall coordinate with RSM Design to select exact color of neon, boots, double backs and pass-through prior to fabrication. Contractor is responsible for referencing and following local code constraints.

F. LED Lighting.

LED modules, systems or fixtures to be GE Lighting System "Tetra" or approved equal. Color temperature to match adjacent architectural lighting, otherwise specified. Final color temperature to be approved at time of mock-up review by RSM and client. All lighting to have even illumination with no hot spots.

G. Mock-Ups

1. Mock-Ups of specific sign(s) may be requested by RSM Design as part of the final Design Intent Documents. The cost of Mock-Ups will be a part of fabricators bid.

2. Mock-Ups will be specified in drawings as two or three dimensional, as well as being operational or not.

3. Mock-Ups will be specified in drawings for in-shop or on-site review, and coordinated with Owner and all interested parties.

4. Mock-Ups will be reviewed and signed off by Owner, RSM Design, and interested parties prior to fabrication and installation.

5. Contractor to resubmit all samples and mock-ups as requested until all RSM Design, general contractor, and Owner specifications are met and approved.

H. Jointing and Brake Forming.

Brake formed material is not allowed unless otherwise specified or reviewed and approved by RSM and or client. All aluminum or steel corners on cabinets, tenant panels or other signs to be 90° sharp w/ eased edges. All joints to be filled and ground smooth, unless the seam occurs along a color break. Then a clean butt joint with concealed backing channel and plug weld is acceptable upon receipt of RSM Design approved sample to match surrounding material finish. All binds, curves and folds to be geometrically correct and produced by a consistent mechanical method unless approved otherwise by RSM Design.

I. Welding.

All exposed welds are to be ground smooth to match surface of adjacent material.

IX. LARGE FORMAT COMPUTER OUTPUT

High-resolution large format computer output to comply with the following:

1. Minimum resolution 200 dpi.

2. Process: 3M SCOTCHPRINT (or approved equal).

3. Substrate: Opaque or Translucent Scotchcal film (or approved equal).

4. Finish: 2 mil matte overlaminate.

5. Input: Electronic art as specified to be provided by RSM Design.

6. Warranty: 5 year minimum

X. INSTALLATION

A. Contractor shall be responsible for determining the erection and dismantling of all barricade or protective coverings necessary to safeguard the public and property during the performance and duration of his or her work.

B. Contractor shall attach signs to substrates in accordance with the structural engineer's and the manufacturer's instructions unless otherwise shown. Install level, plumb and at proper height. Repair or replace damaged units as directed by and to the approval of Owner or RSM Design.

C. Installation of all signage items shall be by the Contractor. Installation includes provision of any required footing, to be reviewed by RSM Design, all anchor bolts, fastenings, attachment metals, and other miscellaneous metal items embedded in concrete or building wall material as required, and security of sign units in place with no visible fasteners.

D. The Contractor shall provide required electrical/data runs and connection point to all required locations. The main point of connection is to be coordinated with and provided by the general contractor. All electrical connections shall be made by a licensed electrician employed by the Contractor for this purpose. All connections shall be made in accordance with the requirements of the National Electrical Code, NEC (or similar code in country of project) in addition to all applicable local codes. Electrical contractor shall provide and install all wiring, conduit, junction boxes and electrical devices necessary to provide electrical power to rough in connections unless otherwise noted. Contractor shall provide concealed transformers, power supplies and coordinate with GC all electrical connections beyond rough-in connections according to NEC approved methods.

E. Contractor shall be responsible for matching sign service available on site to the requirements of the sign, including transformers.

F. All necessary signage components as well as the entire signage assembly are to be UL listed, or by approved nationally recognized testing lab in country of project.

G. Contractor is responsible for compliance with all applicable environmental regulations.

H. Contractor is responsible for compliance with all OSHA regulations (or similar regulations in country of project).

J. Contractor must coordinate installation with general contractor so that overall project schedule is not impacted.K. Contractor is responsible for determining site wind load requirements and insuring that all signs comply.

XI. CLEANING / PROTECTION AND WARRANTIES

A. All items to be installed by the Contractor shall be left in a clean condition. Upon completion of the installation of each sign, clean all soiled sign surfaces and "touch up" as directed by Owner or RSM Design in accordance with the manufacturer's instructions. All debris and packing material shall be removed and disposed of in a legal manner. The protective masking of the plastic surfaces shall be removed by the Contractor upon completion of installation. All excavation and site work shall be returned to its original grade configuration after contract items are installed.

B. Finish Surfaces.

Sign units shall be warranted in writing by the Contractor for a period of no less than one year from the date of Owner acceptance. All finishes are to be warranted for 3 years from the date of Owner acceptance. There shall be:

1. No delamination of any parts of the sign or of lettering from the sign face.

2. No cupping, warping or dishing in excess of the requirements stipulated in the specifications.

3. No bubbling, crazing, chalking, rusting or other disintegration of the sign face, messages or edge finish of the panels.

4. No corrosion developing beneath the paint surface of the support systems, except as the result of obvious vandalism.

5. No corrosion of the fasteners.

6. No movement of signs from their foundations. The signs must remain true and plumb on their foundations, except when the sign has sustained obvious post-installation external damage.

7. No fading of the colors when matched against a sample of the original color and material.

8. No variation of any other performance specified by RSM Design on the drawings or in the specifications.

C. Structure/Components

1. Contractor shall provide Owner with three (3) copies of the written warranty prior to installation, guaranteeing to correct, to Owner's satisfaction, at Contractor's sole expense, all defects in fabrication, faulty materials, workmanship, design, and installation of signage work for a period of one year after completed installation of signage work.

2. Fading, cracking, warping, peeling, delaminating, rusting, corroding, and structural failure, including distortion by whatever cause, shall be construed as failure because of faulty materials and workmanship.

3. Failures during warranty period shall be repaired or replaced to satisfaction of Owner.

D. External Lamps.

All lamps shall be warranted against failure for 90 days, all LED and neon three (3) years and all ballast one (1) year. Lamps and LEDs are to be replaced within 48 hours of notice by Owner, in the event of failure within specified time. These items are to be replaced by Contractor at Contractor's sole expense.

E. Contractor shall have total and complete responsibility for the security of all equipment, materials, and sign components until reviewed and accepted by the Owner

XII. PERMITS

A. Securing and paying for all permits required by local governmental agencies is the responsibility of the Contractor. Inspections and tests necessary for the construction and placement of all work required by the applicable governing agencies is by the Contractor.

B. Contractor shall secure and pay for all insurance required by law including but not limited to Liability, Worker's Compensation, Comprehensible Construction Liability, Personal Injury, Comprehensible Auto and Property on- and off-sites. Contractor shall check insurance requirements for terminology and coordinate insurance requirements with project general specifications. Insurance requirements should be checked for terminology and coordinated with general specifications.

C. Contractor shall not reveal or disseminate any information to any persona(s), private or public, other than RSM Design, Owner, or contractor's personnel as necessary to execute the contract without first contacting the Owner for permission.

XIII. CODE REQUIREMENTS

All Signs Must Comply With ADA Guidelines (in the United States) and International or County/City/Fire Marshall Code Requirements:

A. Contractor to provide copy proofed Braille to ADA required permanent room signs for projects within the United States. Type and symbols to be raised a minimum of 1/32".

B. Signs must be mounted 60" (or metric equivalent) from finish floor to center of sign on latch side of the door where applicable.

C. Characters and background on ADA signage shall be eggshell, matte or other non-glare finish for projects within the United States.

D. Contractor to provide copy of approved city or county fire marshal drawing sets of all applicable signage.

E. Contractor responsible for all signs complying with all applicable codes for specified region.

XIV. BID NOTES

Original fabrication quotes shall be sent directly to the Owner with copies of all pricing information to be sent simultaneously to RSM Design and general contractor. Pricing shall be submitted in accordance with the bid documents.

Bidding contractors are required to clearly indicate in writing within their bid the method of construction anticipated, the materials to be used, and any exclusions or exceptions to the bid documents.

XV. COORDINATION

All foundations, electrical plans, specialty lighting, LED, digital sign components to be coordinated by Contractor. All wiring, fixtures, anchoring, foundations to be by Contractor.

XVI. PROJECT COMPLETION

A. Review & Punch List.

The Fabricator shall notify both RSM and the Owner in writing when all work is completed. Upon notice, RSM will review all work according to their contract with the Owner and prepare a punch list outlining incomplete or unsatisfactory items. The repair or replacement of work outlined on the punch list shall be coordinated between the Fabricator and the Owner.

B. Final Deliverables.

Upon the Owner's acceptance of the work, the Fabricator shall provide the Owner with three copies of a complete set of as-build drawings and service/ maintenance manual for all products and finishes installed under their contract. This manual shall include, but is not limited to, product specifications such as manufacturer information, contact names and addresses, warranty information, technical data, and routine maintenance recommendations for light fixtures, electrical components, paint, finishes, and all other applicable items.

XVII. ACCEPTANCE OF SPECIFICATIONS

Contractor has read and understands the above specifications and agrees to the terms outlined above.

I hereby acknowledge that I/we have read, understand, and accept responsibility for compliance with the provisions set forth within these specifications and will comply with all specifications.

Signature below is required prior to shop drawing submittal.

Fabricator Signature: _____

Date: _____

Miami River Greenway:

Wayfinding and Environmental Graphics Specifications

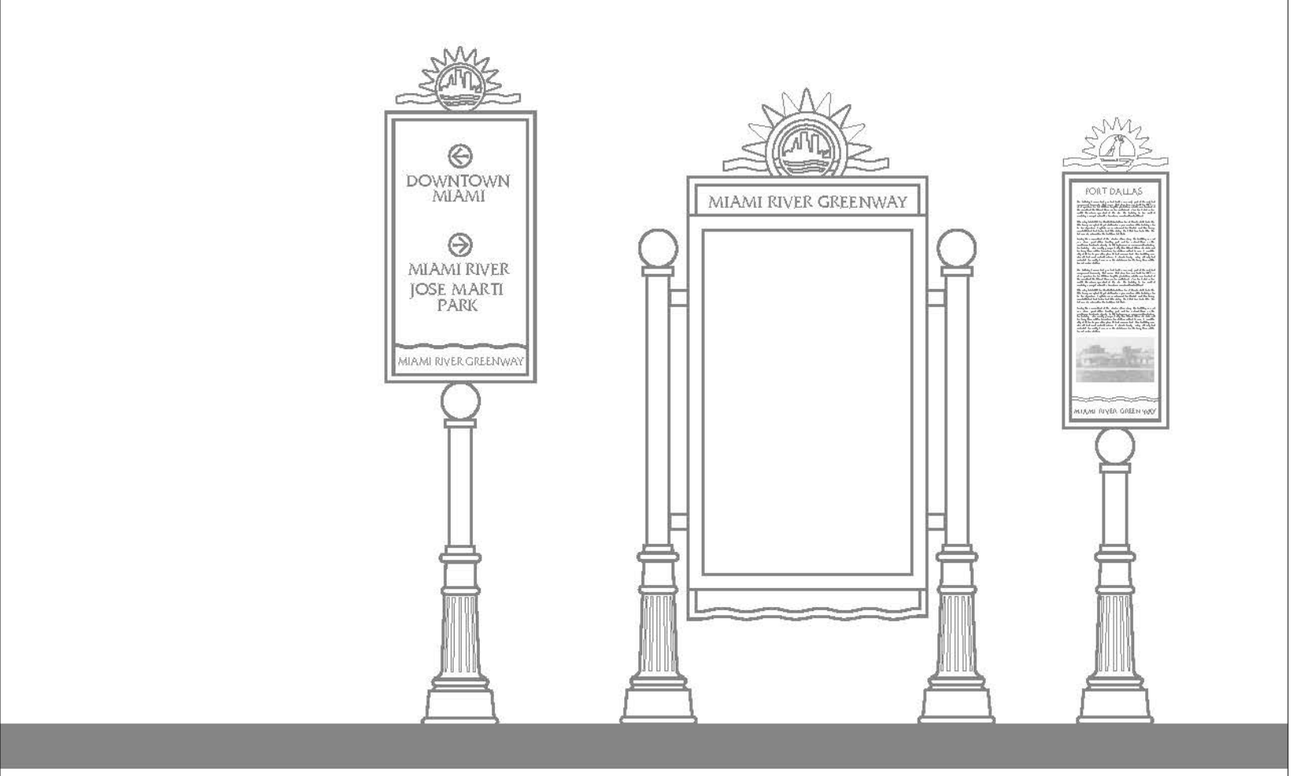

Table of Contents:

Part1: General Specifications

Section 1: General Specifications
Section 2: Products
Section 3: Execution
Section 4: Sign Panel Typeface
Section 5; Sample Bid Form

Part 2: Sign Types

• W-PED, Pedestrian Directional Sign

Sheet 1/W-PED, Pedestrian Directional Sign – Overview
Sheet 2/W-PED, Pedestrian Directional Sign - Overall Dimensions
Sheet 3/W-PED, Pedestrian Directional Sign - Typical Sign Panel Dimensions
Sheet 4/W-PED, Pedestrian Directional Sign - Materials & Colors
Sheet 5/W-PED, Pedestrian Directional Sign - Partial Horizontal Section A-A
Sheet 6/W-PED, Pedestrian Directional Sign - Partial Vertical Section B-B
Sheet 7/W-PED, Pedestrian Directional Sign - Partial Vertical Section C-C
Sheet 8/W-PED, Pedestrian Directional Sign - Typical Symbol Specifications
Sheet 9/W-PED, Pedestrian Directional Sign - Project Symbols 1
Sheet 10/W-PED, Pedestrian Directional Sign - Project Symbols 2
Sheet 11/W-PED, Pedestrian Directional Sign - Sign Messages & Locations W-PED-01
Sheet 12/W-PED, Pedestrian Directional Sign - Sign Messages & Locations W-PED-02
Sheet 13/W-PED, Pedestrian Directional Sign - Sign Messages & Locations W-PED-03
Sheet 14/W-PED, Pedestrian Directional Sign - Sign Messages & Locations W-PED-04
Sheet 15/W-PED, Pedestrian Directional Sign - Sign Messages & Locations W-PED-05
Sheet 16/W-PED, Pedestrian Directional Sign - Sign Messages & Locations W-PED-06
Sheet 17/W-PED, Pedestrian Directional Sign - Sign Messages & Locations W-PED-07
Sheet 18/W-PED, Pedestrian Directional Sign - Sign Messages & Locations W-PED-08

• W-KSK, Kiosk

Sheet 1/W-KSK, Pedestrian Kiosk – Overview
Sheet 2/W-KSK, Pedestrian Kiosk - Overall Dimensions
Sheet 3/W-KSK, Pedestrian Kiosk - Materials & Colors: Part 1
Sheet 4/W-KSK, Pedestrian Kiosk - Materials & Colors: Part 2
Sheet 5/W-KSK, Pedestrian Kiosk - Partial Horizontal Section A-A
Sheet 6/W-KSK, Pedestrian Kiosk - Partial Vertical Section B-B
Sheet 7/W-KSK, Pedestrian Kiosk - Partial Vertical Section C-C
Sheet 8/W-KSK, Pedestrian Kiosk - Partial Vertical Section D-D
Sheet 9/W-KSK, Pedestrian Kiosk - Symbol Construction Details
Sheet 10/W-KSK, Pedestrian Kiosk - “City” Symbol Detail
Sheet 11/W-KSK, Pedestrian Kiosk - “Tree” Symbol Detail
Sheet 12/W-KSK, Pedestrian Kiosk - Sign Messages & Locations W-KSK-01
Sheet 13/W-KSK, Pedestrian Kiosk - Sign Messages & Locations W-KSK-02
Sheet 14/W-KSK, Pedestrian Kiosk - Sign Messages & Locations W-KSK-03
Sheet 15/W-KSK, Pedestrian Kiosk - Sign Messages & Locations W-KSK-04

• W-HIS, Historical Marker Sign

Sheet 1/W-HIS, Historical Marker Sign – Overview
Sheet 2/W-HIS, Historical Marker Sign - Overall Dimensions
Sheet 3/W-HIS, Historical Marker Sign - Materials & Colors
Sheet 4/W-HIS, Historical Marker Sign - Typical Sign Panel Dimensions
Sheet 5/W-HIS, Historical Marker Sign - Horizontal Section A-A
Sheet 6/W-HIS, Historical Marker Sign - Partial Vertical Section B-B
Sheet 7/W-HIS, Historical Marker Sign - Partial Vertical Section C-C
Sheet 8/W-HIS, Historical Marker Sign - Symbol Specifications
Sheet 9/W-HIS, Historical Marker Sign - Sign Messages & Locations W-HIS-01
Sheet 10/W-HIS, Historical Marker Sign - Sign Messages & Locations W-HIS-03

• W-MIM, Mile Marker Sign

Sheet 1/W-MIM, Pedestrian Mile Marker – Overview
Sheet 2/W-MIM, Pedestrian Mile Marker - Dimensions, Materials & Colors
Sheet 3/W-MIM, Pedestrian Mile Marker - Horizontal Section A-A
Sheet 4/W-MIM, Pedestrian Mile Marker - Typical Layouts 1
Sheet 5/W-MIM, Pedestrian Mile Marker - Typical Layouts 2
Sheet 6/W-MIM, Pedestrian Mile Marker - Overall Mile Marker Locations
Sheet 7/W-MIM, Pedestrian Mile Marker - Sign Message & Location W-MIM-01
Sheet 8/W-MIM, Pedestrian Mile Marker - Sign Message & Location W-MIM-02
Sheet 9/W-MIM, Pedestrian Mile Marker - Sign Message & Location W-MIM-03

• W-PER, Perimeter Directional Sign

Sheet 1/W-PRM, Perimeter Pedestrian Directional Sign – Overview
Sheet 2/W-PRM, Perimeter Pedestrian Directional Sign - Overall Dimensions
Sheet 3/W-PRM, Perimeter Pedestrian Directional Sign - Materials & Colors
Sheet 4/W-PRM, Perimeter Pedestrian Directional Sign - Sign Panel Dimensions
Sheet 5/W-PRM, Perimeter Pedestrian Directional Sign - Sign Panel Layouts
Sheet 6/W-PRM, Perimeter Pedestrian Directional Sign - Horizontal Section A-A
Sheet 7/W-PRM, Perimeter Pedestrian Directional Sign - Partial Vertical Section B-B
Sheet 8/W-PRM, Perimeter Pedestrian Directional - Sign Message & Location W-PRM-01
Sheet 9/W-PRM, Perimeter Pedestrian Directional - Jose Marti Park W-PRM-02, 03, 04
Sheet 10/W-PRM, Perimeter Pedestrian Directional - Sign Message & Location W-PRM-02
Sheet 11/W-PRM, Perimeter Pedestrian Directional - Sign Message & Location W-PRM-03
Sheet 12/W-PRM, Perimeter Pedestrian Directional - Sign Message & Location W-PRM-04

Part 3: Symbol Applications

Sheet 1/W-MISC, Miami River Greenway Symbol - Applied to Typical Trash Receptacle
Sheet 2/W-MISC, Miami River Greenway Symbol - Trash Receptacle: Section & Location
Sheet 3/W-MISC, Miami River Greenway Symbol – Applied to Typical Bench
Sheet 4/W-MISC, Miami River Greenway Symbol – Typical Bench: Section & Location

Part One:

General Specifications

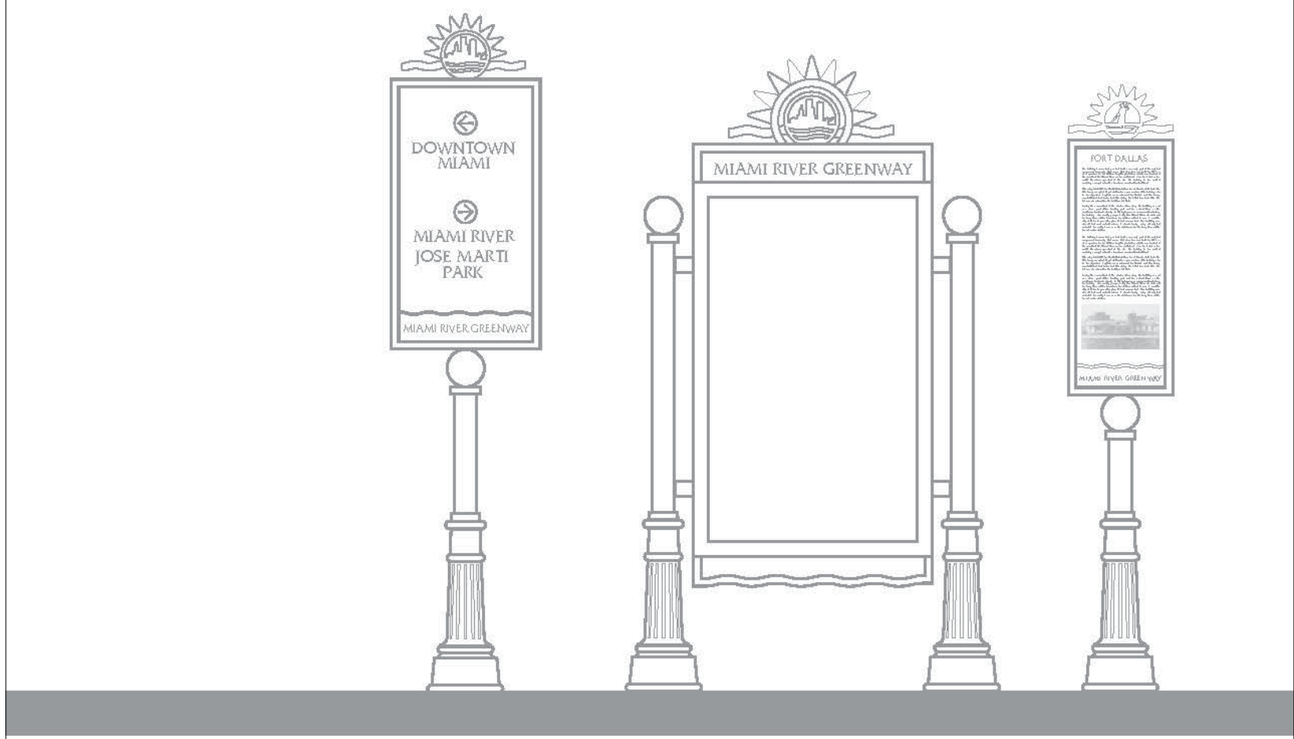

SECTION 1: GENERAL SPECIFICATIONS

OVERVIEW

The sign types specified within this document are elements of a new exterior wayfinding program designed as part of the Miami River Greenways project. These signs will be installed along new exterior public walkways and parks adjacent to the Miami River in Miami, Florida.

This area has a rich cultural history, and is an active "working" river that winds from Downtown through the surrounding communities. The area is in active development and re-development—the new greenway paths wind through diverse neighborhoods consisting of old (and historic) communities, inner city, new residences and condominiums, public parks, commercial fishing & shipping, restaurants, retail, hotels and historic landmarks.

The concepts within are elements of a new urban identity system, designed to help create a unique "sense of place" to this emerging district. The stylized sign graphics, colors and symbols have been designed to compliment, and were developed in conjunction with, new paving, landscaping and street furniture.

These signs will be installed along city streets in very public, urban locations. As such, they will be very accessible to the public—but also very exposed to both the harsh South Florida environment (salt, sun and wind) and potential vandals, graffiti artists, thieves etc.

The specifications within strive to find the proper balance of art and durability—but it will be the responsibility of the selected Sign Fabricator to build and execute these concepts in the most durable, vandal resistant manner possible. The enclosed documents represent "intent", and the minimum acceptable standards.

The City expects the selected Fabricator to work with them, in the City's best interests, to deliver a product with the best, most appropriate materials and finishes and highest levels of quality and workmanship. Paint finishes must be UV, vandal and graffiti resistant. Visible and accessible fasteners should be kept to an absolute minimum, and must be completely tamper-proof. Steel is the preferred choice for all metal components, and should be used whenever possible (aluminum parts are often vandalized and stolen within the City—this should be taken into consideration). Installations must be clean and secure, and meet the strict South Florida codes.

Fabricators are encouraged to suggest alternative methods, materials and finishes if they believe they will produce a superior quality and durability, and provided that the design integrity and intent is not compromised. All suggestions must be clearly presented in writing (at time of bid, and/or time of shop drawings), along with sufficient reasons and supporting data that demonstrates how the alternate method will exceed or outperform the specification. Cost impact of alternate methods and/or materials must also be presented.

Lastly, at time of submission, there was still some minor "tweaking" of the symbol designs depicted within, and still a few small debates over certain sign locations. The information contained here should be considered accurate for purposes of bidding, and any subsequent changes or revisions should be very minor. Sign Fabricator must be sure to consult with the City on these issues and be sure they have the final versions of all symbols and sign locations before executing the work.

1.01 General

Provide Exterior Signage in accordance with requirements of the Contract Documents. Successful bidder(s) must perform as required by contract and coordinate all work with the City of Miami (Owner) and its project consultants and sub-contractors. Sign Fabricator is expected to meet all established schedules and deadlines, and coordinate these with Owner. Sign Fabricator representative is required to attend a general kick-off meeting with Owner, and subsequent periodic meetings as agreed to with Owner. Sign Fabricator is expected to cooperate fully with the Owner to expedite and facilitate the prompt and accurate completion and installation of all sign elements. Sign Fabricator will coordinate his efforts with other contractors and suppliers of equipment and services that the Owner may engage outside of his contract.

1.02 Sign Types, Characteristics and Locations

Refer to accompanying signage design intent drawings.

1.03 Time of Completion

As directed by Owner.

1.04 Preconstruction Conference

A preconstruction meeting will be held with Owner and Sign Fabricator to establish final specification, field working conditions, and proper channels for coordination.

1.05 Codes

Property is located in Miami, Florida in Miami-Dade County. Presiding sign codes are City of Miami and FDOT. Fabricator must insure that all work performed is in accordance with these sign codes.

1.06 Design Wind Load

Provide sign assemblies designed, tested, and installed to withstand positive and negative wind loads per the requirements of all local and national codes for the area, and approved by licensed engineer.

1.07 Submittals by Sign Contractor

A. Shop Drawings
Shop drawings for all items must be submitted to Owner for approval prior to all fabrication. Furnish elevations, details of fabrication and erection, including all materials, shapes, dimensions, finishes, design loads, anchorage, letters of illumination, method of connections etc. Show dimensions of letters and logo forms.

B. Samples
Fabricator must match exactly all custom paint and materials as specified. Fabricator must provide samples, for approval, of all finishes specified. Submit (2) sets of 8" x 10" (for review/approval by Owner) non-returnable samples of each custom and standard color, material or finish as specified in these design documents. Then submit (2) sets of non-returnable 8" x 10" samples of each approved custom and standard colors and finishes on the actual materials.

C. Full -Size Patterns and Lettering
Provide Owner with full-size (where possible- to scale for very large elements) patterns of each sign element to be fabricated. Fabricator is responsible for generating all additional "camera -ready art", and must supply layouts, for approval, of each sign panel prior to fabrication. City will provide selected Fabricator with some typical digital "camera-ready" artwork. Art that will be provided includes all symbols/logos to be used, (1) typical layout for each sign type, camera-ready artwork for all Porcelain Enamel historical sign graphics, and fonts used. Artwork will be supplied on CD, in vector format as Adobe Illustrator CS and .eps files, Macintosh format.

D. Supplementary Product Literature
The Sign Fabricator will furnish Owner any manufacturers' literature describing the general properties of each product to be used in the Work.

E. Structural calculations
Furnish engineering calculations to show that maximum stress and deflection of sign elements and sign support system do not exceed specified performance requirements under full design loading. Calculations shall be prepared and sealed by an engineer licensed in the province where project is located.

F. Extra Materials
Deliver extra materials to the Owner in manufacturer's original packing, touch up paint, lamps, hardware, installation materials, inserts, etc., as may be required.

1.08 Permits by Sign Contractor

Sign Contractor shall make all submittals for permits, shall be responsible for paying all fees, making adjustments as required, or any task necessary for obtaining local building and installation Sign Permits for the proper execution of the work. Sign Contractor to coordinate all permits required with the Owner and/or General Contractor.

1.09 Quality Assurance

A. Working Prototypes
Provide working prototypes of actual sign types as specified, within an agreed upon time frame after signing of contract. Prototypes for this project are listed below, and are in addition to the finish samples required in 1.07 (B).

1. One (1) complete Sign Type W-PED-01, Pedestrian Wayfinding sign. Sign is to delivered and presented to the City in Miami, at a location and date to be specified by the City. Prototype will be evaluated for compliance of colors, materials, size, workmanship and overall quality. Sign will be returned to Fabricator with written comments and may be used as a production piece provided all Owner's comments and corrections are flawlessly executed. Sign will be the measure by which all others will be judged, and other signs will be expected to exactly match prototype standards.
2. A working and illuminated W-KSK, Kiosk sign must be made available for review and evaluation in Sign Fabricator's shop during the fabrication process. Owner will review sign for proper illumination, seals and cabinet function, as well as materials, colors and quality of workmanship. Timing and scheduling of review and visit will be discussed and mutually agreed to by Owner and Fabricator.
3. A sample of the Porcelain Enamel product/technique to be used on the W-HIS Historical Marker signs, showing similar material thickness, finish, resolution and line-screen for graphics. Sample does not need to be created for this project, but must be from the actual Porcelain manufacturer that will be used.
4. A sample of the Cast Bronze product/technique to be used on the W-MIM, Mile Marker signs, showing similar thickness, material, finishes and casting depth. Sample does not need to be created for this project, but must be from the actual Foundry that will be used.
5. One (1) sample each of the six (6 - total) different water-jet cut symbols to be used on the top of Sign Type W-PED and W-HIS signs. Symbols must be fully painted with actual finish, and will be reviewed for accuracy of representation and quality of workmanship. (1) Complete set of symbols will be kept by Owner as a record set.

B. Work-In-Progress Approval
In addition to a shop review of the Kiosk sign mentioned in "A. Working Prototypes" above, Owner may request to review other work-in-progress at the Sign Fabricator's shop. If requested by Owner, Fabricator must make available for review and inspection in

shop of requested signs or elements. Owner will give proper advance notice and schedule in advance any shop visits.

C. Regulatory Requirements
Comply with applicable requirements of the laws, codes, ordinances, and regulations of Federal, State and Municipal authorities having jurisdiction. Obtain necessary approvals and permits for all such authorities.

D. Markings and Labels
No labels or markings are to be used unless required by authorities per code. If necessary, locate markings and other identifications so as to be concealed from public view and as acceptable to Owner.

E. Final Location of Signs
Sign locations are provided within the accompanying specification. The exact final locations of sign elements shall be reviewed, approved, and directed by Owner and confirmed at the site. Sign Contractor shall arrange for meetings at the site to accommodate Owner's review and direction of final locations.

F. General

1. The Sign Contractor is responsible for hiring, compensating and coordinating all sub-contractors in the various trades that may be required to construct the Work. The Sign Contractor shall be responsible for the quality of all materials and workmanship of any firm or individual who act as sub-contractor. All work under this Contract shall be performed by skilled craftsmen under supervision of trained foremen, experienced in the trade or craft required to accomplish the work and produce products of high quality. The Sign Contractor shall guarantee all materials and workmanship for five years after date of acceptance of Work by Owner.

2. Written dimensions on drawings shall have precedence over scaled dimensions. Sign Contractor shall field verify and be responsible for all dimensions and conditions shown by these drawings. Shop details must be approved by Owner.

3. Owner shall be notified by Sign Contractor of any discrepancies in drawings, in-field dimensions or conditions and/or changes required in construction details.

4. Sign Contractor may not manufacture, reproduce, or exhibit these designs, or modify them for any other purpose outside of this current contract without written approval of Owner.

1.10 Warranty

A. Signing Warranty
Furnish 5-year written warranty signed by the Sign Contractor and Installer, agreeing to repair or replace Work that has failed as a result of defects in materials or workmanship.

Fabricator is responsible to acquire any authorization necessary to provide manufacturer's warranty for all materials. Upon notification of such defects, within the warranty period, make necessary repairs or replacement at the convenience of the Owner.

B. Paint Finish Warranty

Paint finish specified for this project is "Matthews Acrylic Polyurethane" and this is the minimum acceptable finish. Fabricator may propose alternate finishes if he believes, and can show sufficient evidence to support, that the alternate finish will exceed the specified finish in wear, durability, color fastness and maintenance. All specified colors must still be matched exactly. Powder coating may be presented for evaluation as an alternative, if both feasible & not cost prohibitive.

1."Excessive Fading"
A change in appearance that is perceptible and objectionable as determined by the Owner when visually compared with the original color range standards.

2."Excessive Non-Uniformity"
Non-uniform fading to the extent that adjacent panels have a color difference greater than the original acceptable range of color.

3."Will Not Pit or Otherwise Corrode"
No pitting or other type of corrosion, discernible, from a distance of 10' (3m), resulting from the natural elements in the atmosphere at the project site.

4. Paint finishes shall be "graffiti-resistant" within current reasonable and acceptable standards for such signs. Graffiti resistant coatings or paint additives should be used when possible and practical to make graffiti removal easier.

1.11 Maintenance

Furnish complete manuals describing the materials, devices and procedures to be followed in operating, cleaning and maintaining the Work. Include manufacturer's brochures and parts lists describing the actual materials used in the Work, including metal alloys, finishes, and other major components. Assemble manuals for component parts into single binders identified for each system.

1.12 On-Site Conditions
By bidding, Sign Contractor acknowledges that he has visited the site and is familiar with the site and all conditions under which this work is to occur.

SECTION 2 : PRODUCTS

2.01 Sign Materials

A. Adhesives
Silicone adhesive used for installing sign items shall be as manufactured by General Electric, Dow Corning, or equal. Polyfoam or "Isotac" contact adhesive tape, manufactured by 3M, shall be used in conjunction with silicone adhesives for installation of sign parts (if applicable), in minimum thicknesses available.

B. All Specified Metals
Steel is the preferred material for all ornamental, architectural work. If necessary, Aluminum may be used in combination with/instead of steel. Due to the public nature and location of the project, Owner is concerned that aluminum components are a greater theft and vandalism risk, given past experiences elsewhere in the City. Surface finish shall be smooth, free of extrusion marks or imperfections. Alloy shall be selected to meet the structural requirements of the specific application. Structural metal for concealed framing shall be of hot or cold rolled steel or structural aluminum as required to properly satisfy sign engineering specifications.

C. Brass/Bronze/Stainless Steel/Aluminum
Where Brass, Bronze, or Aluminum is specified on the drawings, provide as a solid not plated, alloy of copper and zinc. All Stainless Steel shall be of an alloy with the highest degree possible of corrosion resistance.

D. Concrete Foundations
Sign Contractor shall provide structurally engineered concrete footings/foundations and nonstructural (mow-strip) pads at grade (in landscaped areas only) to meet all local and national building code requirements.

E. Foam Tape (if applicable)
Provide black polyurethane foam tape or "VHB" laminate tape as manufactured by 3M (or equivalent), applied to sign components as required, non-visible.

F. Porcelain Enamel
Detailed Requirements:

1. Base Metal
Base metal shall be steel. For the purposes of this specification, steel is defined to include:

a. Special purposed "enameling iron or steel" of low metalloid and copper content, expecially manufactured and processed for the production of porcelain enamel units for architectural purposes

b. Conventional cold rolled sheets which can be satisfactorily porcelain enameled and which meet other requirements of this specification. Note: Warpage may be a significant factor when using cold rolled steel as it impacts "6. Flatness of Panel" below.

2. Processing
A porcelain enamel coating shall be applied to all areas of each unit, including back and flanges, by methods recognized as good commercial practice. At least one additional fired coating shall be applied to the face side of each unit.

3. Corrosion Protection
The back side of non-laminated panels shall be protected with fired porcelain enamel coating. The coating requirements for the back side do not apply when adequate corrosion protection is provided to the panel by the laminated construction.
Corrosion protection in laminated panels is dependent upon the durability of the lamination.

4. Porcelain Enamel Finish

a. Weather Resistance
The porcelain enamel finish on all surfaces exposed to weathering shall pass the acid spot test as given in the Test Methods section. In addition, all red, yellow and orange porcelain enamels shall pass the cupric sulfate test as described in the same section.

b. Continuity of Coating
Visual inspection of each piece shall reveal no visible breaks or surface defects in the cover coating that will expose the underlying coating or the steel on surfaces exposed to weathering, nor the underlying steel on either the back or flanges. This requirement shall not apply to sheared edges.

Special metallic coatings are sometimes fired onto porcelain enamel surfaces to achieve specific textures and finishes. This coating may be continuous or may have purposely induces breaks and discontinuities. Such coatings shall qualify under this requirement if the underlying porcelain enamel satisfies all requirements in this specification.

c. Surface Appearance
The porcelain enamel on all surfaces exposed to weathering shall be free of blemishes in the coating that my impair the serviceability or detract from the general appearance of the panel when viewed from a distance of 5 feet or the distance at which the panel will be normally viewed, whichever is the greater. Orange peel and surface finish should be reviewed and agreed on before production. Color tolerances should be

agreed on before production. Certain colors are more susceptible to color stability.

6. Flatness of Panel
Finished faces shall have a maximum variation of 3/16" (4.76mm) in a convex direction when measured perpendicular to the nominal plane of the panel face. Variation in the concave direction shall be limited to 3/32" (2.38mm) from actual plane of the panel face. These tolerances are for panels with a face area of 8 sq. ft. (0.86 m2) or less. Proportionately greater allowance will be permited for panels of greater areas. Panels are to be measured in the position (usually vertical) in which the panel will eventually be installed. Note: While not a part of the specification itself, further data regarding flatness is set forth in the Section, Supplementary Considerations.

7. Clips and Attachments
All metal lugs, clips and other attachments fastened to the panel, as well as those furnished unattached by the manufacturer, for the purpose of attaching the panel to the building structure shall be made of a recognized corrosion resistant metal such as stainless steel type 302 or equivalent. This requirement specifically excludes stiffener bars or braces, clips for holding insulation in place, and similar devices not intended for the purpose of attaching the panel to the building structure. Also excluded are furring, substructure assemblies, or braces that may be furnished by the manufacturer.

8. Gloss
The gloss of the porcelain enamel finish, together with permissible tolerances in gloss, should conform visually with samples selected by the architect and/or purchaser during negotiation of the contract. It is also recommended that the finish be of a type that will not reflect distinct images. If the reflecting power is high, images seen in the mounted panels will usually be distorted due to even very small deviations from flatness. Experience has shown that the overall appearance of a structure will be considerably improved if the image reflection (distinctness-of-image gloss) is kept as low as possible. A qualitative evaluation of this type of gloss can be made by observing the image of a window mullion in the surface of the panel. If the image is clear and sharp, the distictness-of-image gloss is normally too high for architectural purposes.

9. Color
The color and color tolerance should be specified in the purchase contract. If possible, this should be based on porcelain enameled sample color specimens. Compliance with color specification may be determined by visual matching under viewing conditions mutually agreed upon by the contracting parties, or may be determined instrumentally.

The color tolerance to be specified should depend upon the color service requirement and the ease with which particular color or colors can be controlled

in production, and should be clearly specified in the purchase contract. To be considered also are the type of structure, the texture of the finish, and the proximity of adjacent panels. Some colors can be controlled more closely than others.

Decorative colors and coloring processes, such as stenciling, silk screening and highlighting, may be used to produce designs, letters and special effects, provided the finish so produced meets all of the requirements of this specification

10. Texture
The porcelain enamel will be furnished in a smooth and non-textured finish. Orange peel tolerance should be specified with tolerance samples.

11. Thickness of Porcelain Enamel
Various thicknesses are encountered in commercial ware. Thickness tolerance should be agreed upon in writing before production. Texture, color and processing techniques influence the amount of porcelain enamel which is applied.

Thin porcelain enamel coatings are desirable to provide maximum resistance to damage from flexure. However, processing methods and desired appearance characteristics may result in variations of recommended minimum thickness of the coating. A minimum of 0.0035" (0.089 mm) of cover coat will normally provide acceptable durability. The total thickness may range from 0.005 to 0.020" ().127-0.508 mm), depending upon process and appearance.

Total thickness should not exceed 0.020" (0.508 mm), except where greater thicknesses are necessary to meet specific appearance requirements.

12. Thickness of Metal
Thickness, grade and design tolerance of metal should be agreed upon during negotiation of the contract. Full consideration should be given to the size, shape or detail of the unit, and the duty which the unit is to perform in the building structure

13. Packaging and Shipping
Packaging, shipping and handling methods should be specified and should be practical for supplier, shipper, and erector.

14. Shop Drawings
Complete drawings should show forming detail, tolerances allowed (both dimensional and flatness), location in completed structure, and on-the-job cutting or drilling requirements. The maximum allowable extent of damage due to drilling and cutting should be agreed upon by contracting parties.

G. Hardware/Hinges
Provide and install all incidental hardware necessary for the proper functioning of the signs, including but not restricted to materials and products covered in this section. Provide stainless steel hinges for all hinged access panels. Provide pin tumbler locks for all access panels requiring locks. Provide stainless steel fasteners for assembling ferrous and nonferrous metals. Exposed fasteners should be kept to an absolute minimum to adhere to design intent and to minimize risk of vandalism. Any exposed fasteners must be 100% tamper-proof. Every provision must be taken to insure exposed fasteners will be extremely difficult, if not impossible, to be removed or tampered with.

H. Insulation
Separate all ferrous and non-ferrous metals with non-conducive gaskets to prevent electrolysis. In addition to gaskets, provide stainless steel fasteners for same case.

I. Acrylic Plastic & Lexan
Shall be continuous manufactured/extruded UV polycarbinate lexan, appropriate for exterior applications as required. All plastics shall be of uniform color, translucence and illumination, as supplied by manufacturer. No visible seams are permitted. Minimum allowable thickness is 1/8" thk. unless otherwise noted on drawings.

2.02 Finishing Materials

Linear Polyurethane Coatings. Provide the following or approved equal as acceptable to Owner.

1. Acrylic Linear Polyurethane Enamel Two component, acrylic aliphatic isocyanate/ acrylic polyurethane having ultraviolet inhibitors and engineered for application to sign components.

2. Primer for Aluminum Two part component Primer: One coat Matthews 74-734 and 74-73S Metal Pretreat at .25 mils dry film thickness or one coat of Matthews 74793 Spray Bond at .15 to .25 mils dry film thickness or Wyandotte/AKZO Grip Guard Wash Primer (2AFY-31284) with Grip-Guard ash Primer Hardner (lOAFK-31285) combined and applied per manufacturer's specifications or approve equal (primer) for the application of the pre-approved and pre-formulated paint system.

3. Clear Sealers
As required of highest quality available, applied per manufacturer's specifications: Crystal Clear Polyurethane Sealer.

2.03 Lighting and Electrical

A. Responsibility
Sign contractor to coordinate with G.C. and the City, the provision and installation of all necessary electrical hook-ups, power requirements and sources of power. G.C./Sign contractor to insure that adequate source of power is provided at all sign location points-of-connection.

B. Electrical Components
Sign Contractor shall provide all electrical materials necessary to properly illuminate the sign elements, including ballasts, transformers, sockets, fluorescent housings, connectors, lighting elements and all other equipment which shall be new and shall be approved by Underwriters' Laboratories, Inc. (U.L. rated). The assembly of all components within the illuminated sign elements and lighting control area shall conform to all standards of Underwriters' Laboratories, Inc. as published in the latest edition of "Standards of Sign Safety US", and all illuminated parts shall bear the U.L. label. There shall be no exposed wiring or connections unless otherwise coordinated with the Owner. Sign Contractor to provide in bid for all work required from P.O.C. to sign.

C. Ballasts
As required for internally illuminated cabinet signs in quantity and arrangement as recommended by ballast manufacturer; accessible for maintenance.

D. Disconnect Switch
All signs or sign components with electrical service shall be equipped with an approved external disconnect switch, flush mounted on top of the cabinet, with circuits and capacity to control all primary wiring within the sign. Location of switch must be shown on shop drawings, positioned in the most non-visible and least accessible to the public location as is possible, and is subject to Owner approval.

E. Illumination
All signs with fluorescent lamps shall be cool white, at the length and placement necessary to provide even illumination, without light leaks. All lamps and ballasts shall be provided by the Sign Contractor. Provide waterproof flush access panels, concealed wherever possible. Conduit wiring and electrical equipment from the "J" box within to any part of the sign shall be provided by the Sign Contractor.

F. Ventilation
While maintaining a proper weather seal, provide for sufficient ventilation of sign components to prevent overheating or warpage; allowing for color of sign, mounting surface, climatic conditions, etc. In providing for ventilation, protect sign from elements (rain, wind, debris, etc.) that may cause operational or cleaning problems. Signs/cabinets with light leaks will not accepted.

G. Wiring
High-tension wiring shall not be less than GT0 15 wire. All wiring shall be AWM 90 0 centigrade 1000 volt TW/MTW U.L. file no. 18971. Wiring connectors for wire splicing shall be U.L. approved 1000 volt capacity. They shall be Scotch Lock type Y or R equal. All splices shall be placed as to easily access for inspection.

H. Electrical Connection
Sign Fabricator shall connect sign to power source. Owner will supply appropriate power to sign site.

I. Verification of Site Voltage
Sign fabricator shall verify site voltage prior to fabrication and insure compatibility of all signage elements.

2.04 Fabrication of Signs and Supports

A. General
Provide custom manufactured sign assemblies, components completely fabricated and finished at factory before delivery to site. Construct to accurate detail and dimensions as shown and as review on shop drawings. Fit and assemble the Work at shop to the greatest extent possible, and mark the components as required to facilitate assembly during installation. Exposed fasteners on finished faces will not be allowed, unless specifically indicated. Waviness and oil canning of surfaces is not acceptable.

B. Seams and Joints
Whenever possible, in the interest of durability and vandal resistance, all sign elements should be continuously welded together. Mechanical fasteners should only be used when welding is impossible, or on parts that are not publicly accessible. Welded joints shall be ground filled and finished flush and smooth with adjacent work. Such seams shall be invisible after final finish has been applied. Spot welded joints shall not be visible on exterior of signs after final finish has been applied. No gaps, light leaks, waves, or oil canning will be permitted in work.

C. Metal Signs and Supports
Fabricate exposed surfaces uniformly flat and smooth, without distortion, pitting, or other blemishes. Form exposed metal edges to a smooth radius. Grind exposed welds and rough areas to make flush with adjacent smooth surfaces.

1. Welding
Make welds continuous. Comply with American Welding Society, Aluminum Association, and Copper Development Association standards for the type of metal. Provide the alloy and type required for strength, workability, compatibility and color match after grinding smooth and finishing the fabricated product.

2. Fasteners
Provide tamper-proof bolts, nuts, screws, washers, anchors and other devices required to complete the work. Use same basic metal alloy as the metal fastened, and finished to match in color and texture. Use stainless steel where joining dissimilar materials and weather seal. Use exposed fasteners only where indicated. Perform drilling and tapping at shop. Provide adhesive, sealant, and other necessary materials as specified by Owner.

3. Dissimilar Materials
Where metal surfaces will be in contact with dissimilar materials, coat the surfaces with epoxy paint or provide other means of dielectric separation as recommended by manufacturer to prevent galvanic corrosion. Separate all ferrous and non-ferrous metals with non-conductive gaskets, provide stainless steel fasteners to secure ferrous to non-ferrous metals.

D. Hardware
Provide all incidental hardware necessary for the proper functioning of signs. External hardware shall conform to the external appearance of the sign, and be tamper-proof.

E. Castings
Exposed surfaces uniformly free from porosity and roughness. Edges filled and ground smooth. Faces chemically etched and mechanically polished for specified finish.

F. Galvanizing
Provide for steel components in exterior construction, and where noted to be galvanized. Complete the shop fabrication prior to application of the zinc coating. Remove mill scale and rust, clean and pickle the units as required for proper pretreatment of the surfaces.

G. Water-Jet Cutting
Ornaments and logos that are specified as water-jet cut may not be produced by alternate methods. Ornaments should be cut by computer driven machinery using supplied digital vector artwork, from a single piece of metal plate, and must exactly and consistently reproduce the same design in multiple quantities needed. Metal must be cut clean and smooth with 90-degree edges. All sharp edges, burrs, marks etc. must be ground smooth and clean prior to application of paint finish.

2.05 Shop Application of Sign Finishes

A. Paint Finishes
Clean the surfaces as required for proper adhesion of coatings Use 3M Co. “Scotch Brite” pads with cleanser and water, and/or chemically treat as recommended by paint manufacturer to remove deleterious film or residue.

1. Primer
Provide in strict accordance with paint manufacturer’s recommendations as required for proper adhesion and application of finish.

2. Paint
Provide pretreatment & primer in accordance with manufacturer's recommendation.

3. Clear Coat Finish
Provide pretreatment, primer, and gloss finish coatings in accordance with manufacturer's recommendations.

2.06 Artwork

A. Sign Contractor is responsible for generating all non-provided camera-ready artwork required to faithfully execute the Work, using the specification and typical digital camera-ready art provided, and all specified typefaces, symbols and logos.

B. Typeface, letter and word spacing shall follow the format as demonstrated in the Sign Specification documents.

C. All artwork to be produced by digital means by specialists trained in this art.

D. All text is to be generated by digital means. No hand drawn fonts.

E. Owner must review and approve all camera-ready artwork prior to fabrication. Sign Fabricator agrees to correct or adjust any artwork that does not meet Owner's approval.

F. Artwork generated is for the specific use of executing this project and may not be re-used in its same form on non-related projects.

2.07 Application of Graphics

A. Silk screened images and typography
Provide photo processed screening, from digital artwork, arranged to furnish sharp and solid images without edge build-up or bleeding of the coating. Ink density must be 100% opaque, with no transparency or "show through" of background color or graphics.
Provide only weather, vandal and graffiti resistant coating materials, compatible with the intended substrates.

B. Vinyl Die-Cut and Pattern-Cut Graphics
Use of vinyl graphics and/or lettering for any and all sign types in this project is prohibited.

2.08 Application of Sign Elements

A. Preparation
Surfaces to receive the sign elements shall be clean, dry, and otherwise made ready for the application of materials. Accurately measure and layout the required marking configurations as indicated on drawings.

B. Sign Graphics
Provide letters, numerals, symbols, and other graphics markings, using finish materials shown. Apply the graphics neatly, uniformly proportioned and spaced, and accurate within the dimensions indicated. Prepare the substrate surfaces and apply finish materials in accordance with manufacturer's instructions.

SECTION 3: EXECUTION

3.01 Pre-installation

A. Verification of Conditions

Examine the areas to receive the Work and the conditions under which the Work would be performed. Sign Contractor shall notify Owner of conditions detrimental to the proper and timely completion of the Work. Do not proceed until unsatisfactory conditions have been corrected.

B. Pre-Installation Meeting

A pre-installation meeting will be held with Owner and Sign Contractor to mutually agree on all installation details, placement, access, etc.

3.02 Installation of Signs

A. General

Complete installation shall be in accordance with manufacturer's printed instructions and accepted shop drawings, to produce Work complying with the Contract Documents. The Sign Contractor will be responsible for daily clean-up of their areas of work.

B. Erection of Signs

Set and attach the Work accurately in location, alignment and elevation, plumb, level and true, as measured from established reference points and from other Work already in place. Fit components accurately together to form tight joints and secure connections. Coordinate with other trades as necessary, if applicable.

3.03 Adjusting

Neatly repair minor blemishes or marring on finished surfaces so that repairs are imperceptible. Completely replace components having permanent non-removable scratches, stains, or other defacement.

3.04 Cleaning

Upon completion of the Work, remove unused materials, debris, containers and equipment from the project site. Remove protective coverings and clean the exposed surfaces of the Work to removal dirt, stains and other substances, by methods as recommended by manufacturer.

3.05 Protection

Protect the Work during the construction period so that it will be without any indication of use or damage. Leave the Work clean and free from defects at time of Owner's acceptance.

3.06 Final Walk-Through and Punch List

A final walk-through will be held with Owner to review the finished installation. Sign Contractor will prepare a punch list of all items requiring modifications. Owner reserves the right to reject all or part of a sign that does not correspond to Design Drawings and specifications or the approved shop drawings, lettering patterns, samples, etc.

3.07 Guarantee

Contractor to provide full guarantee of all workmanship, materials, equipment etc. of this installation for a period of one (5) years after Owner acceptance. Contractor shall replace/repair any defective work within an agreed upon timeframe after notification by Owner, throughout the duration of this period. Contractor shall execute the Warranty/ Guarantee form supplied by Owner.

3.08 Fabrication Errors

If the Sign Fabricator has made an error in copy, color, material, quality, etc. these items must be corrected within an agreed upon timeframe of Owner's observation of error (at no additional cost the Owner). Owner will notify the Sign Fabricator with a written punch list as errors are discovered.

3.09 Storage

If necessary, based on overall project completion dates, Owner may request that some completed signs be stored by the Sign Fabricator in their shop until location is sufficiently built-out and ready for sign install. Storage, if needed, should not be for longer than six (6) months.

SECTION 4: SIGN PANEL TYPEFACE

ABCDEFGHIJKLMNOPQRSTUVWXYZ

abcdefghijklmnopqrstuvwxyz

0123456789

"Friz Quadrata"
(Adobe Systems)

SECTION 5: SAMPLE BID FORM

(This form must be completed and returned with bid)

Sign Type	Quantity	Unit Cost	Extended Cost
W-PED, Pedestrian Directional		$	$
W-KSK, Kiosk		$	$
W-PRM, Perimeter Directional		$	$
W-MIM, Mile Marker		$	$

Installation Price $ _____

Permitting Costs $ _____

Shipping Costs $ _____

Taxes $ _____

Total **$** _____

Notes / Comments: _____

Part Two:

Sign Types

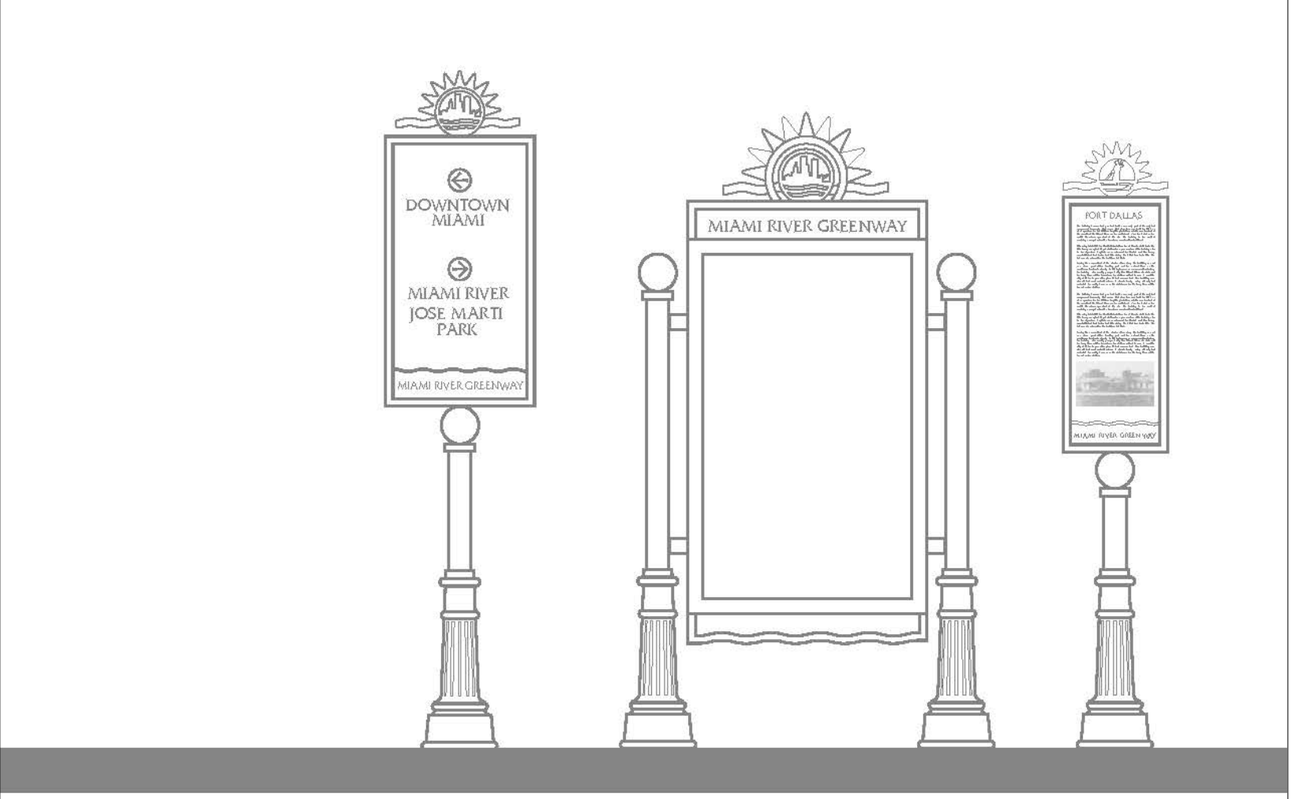

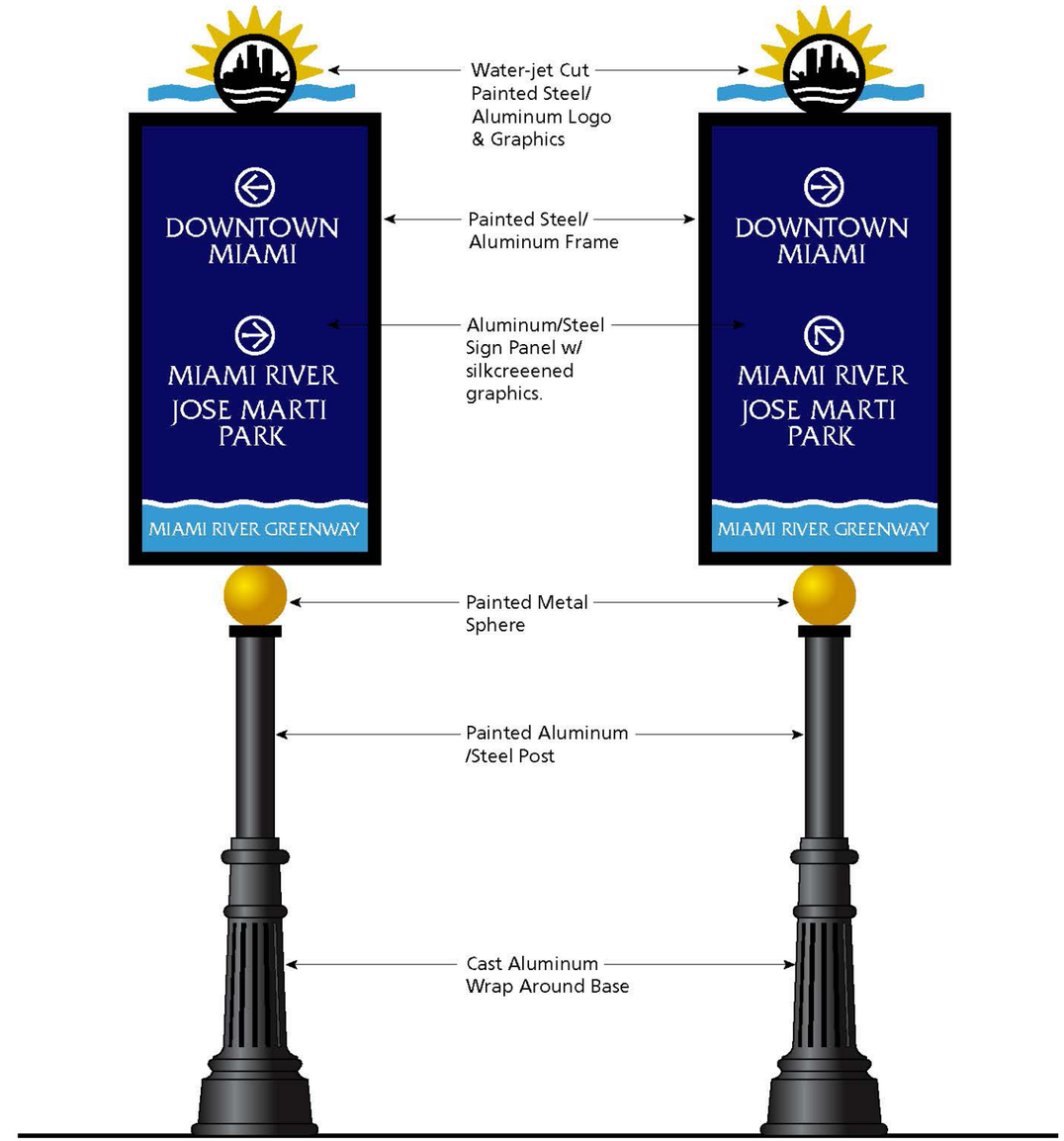

1
W-PED

Pedestrian Directional Sign - Overview
Scale: 1″ = 1′-0″

Sign Type: **W-PED**

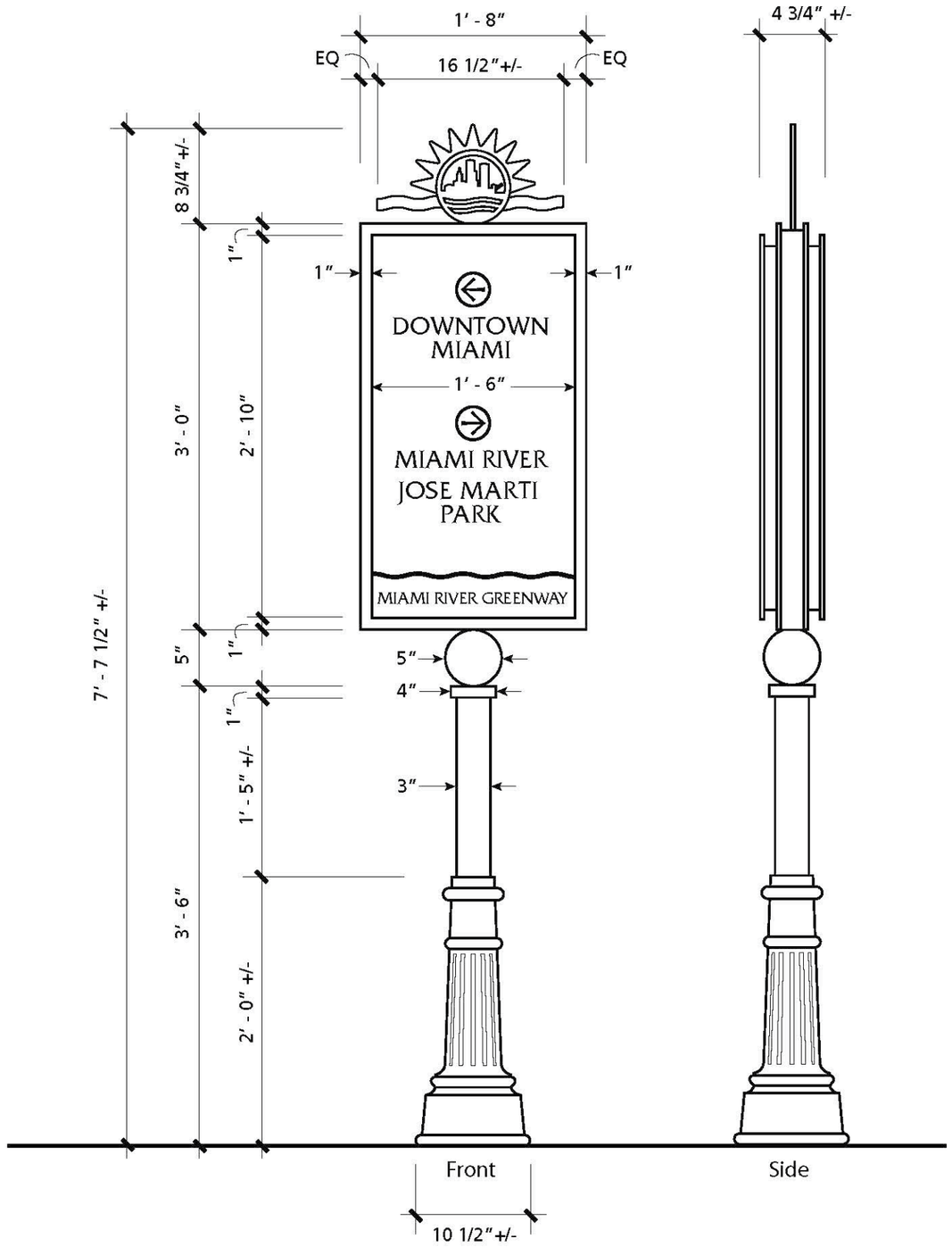

2 W-PED Pedestrian Directional Sign - Overall Dimensions
Scale: 1″ = 1′-0″

Sign Type: **W-PED**

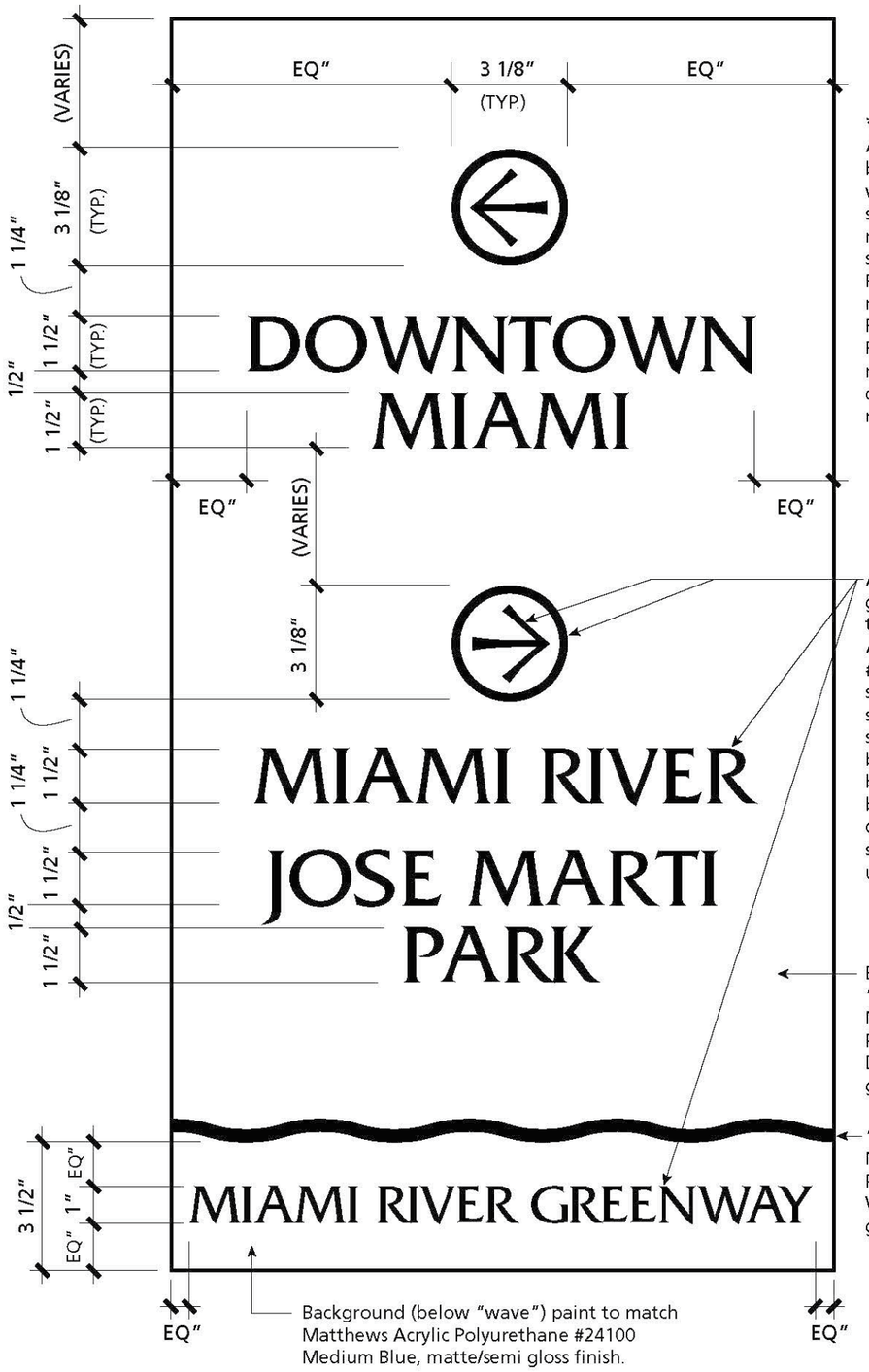

3 W-PED Pedestrian Directional Sign - Typical Sign Panel Dimensions
Scale: 3″ = 1′-0″

Sign Type: **W-PED**

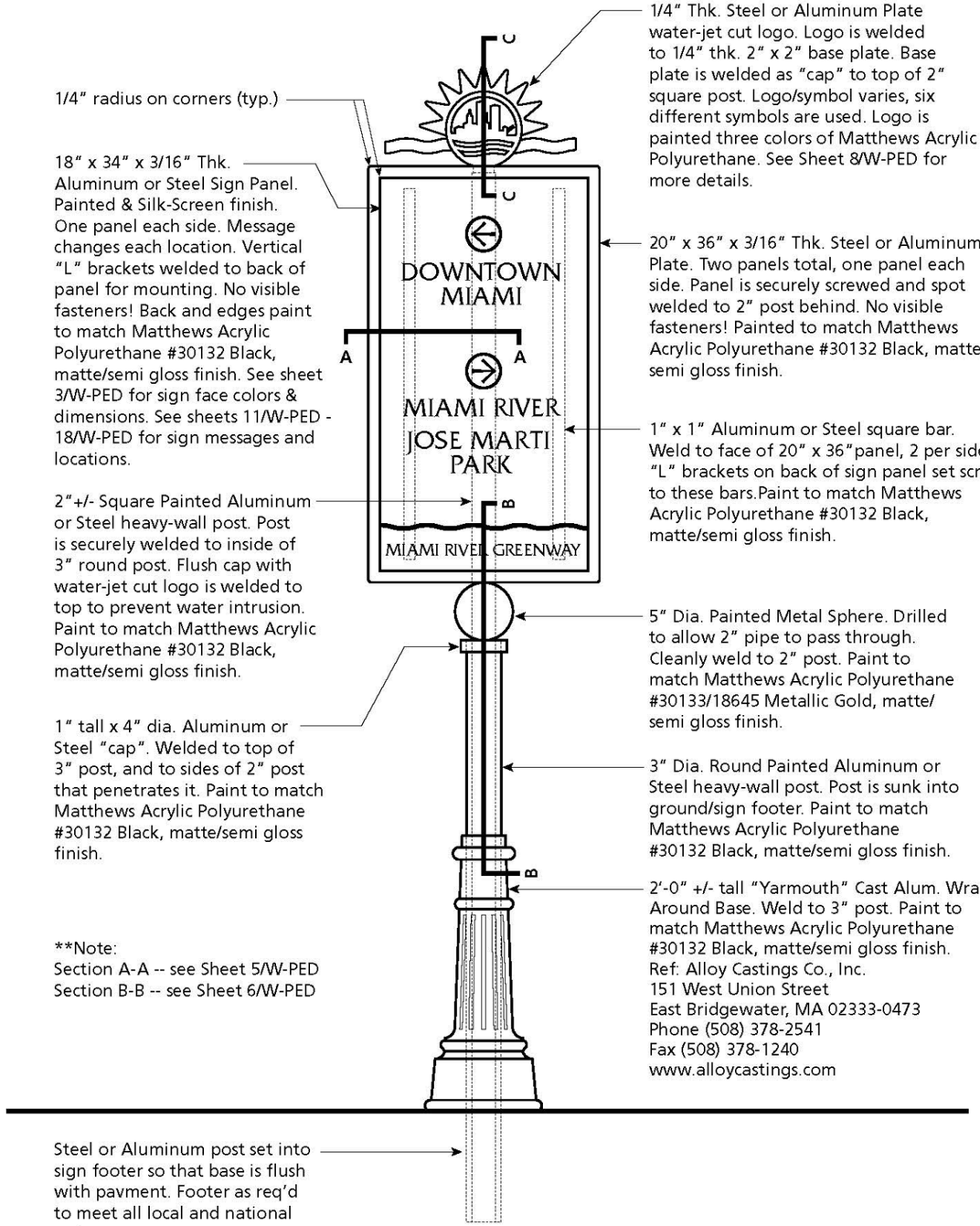

4 W-PED Pedestrian Directional Sign - Materials & Colors
Scale: 1"= 1'-0"

Sign Type: **W-PED**

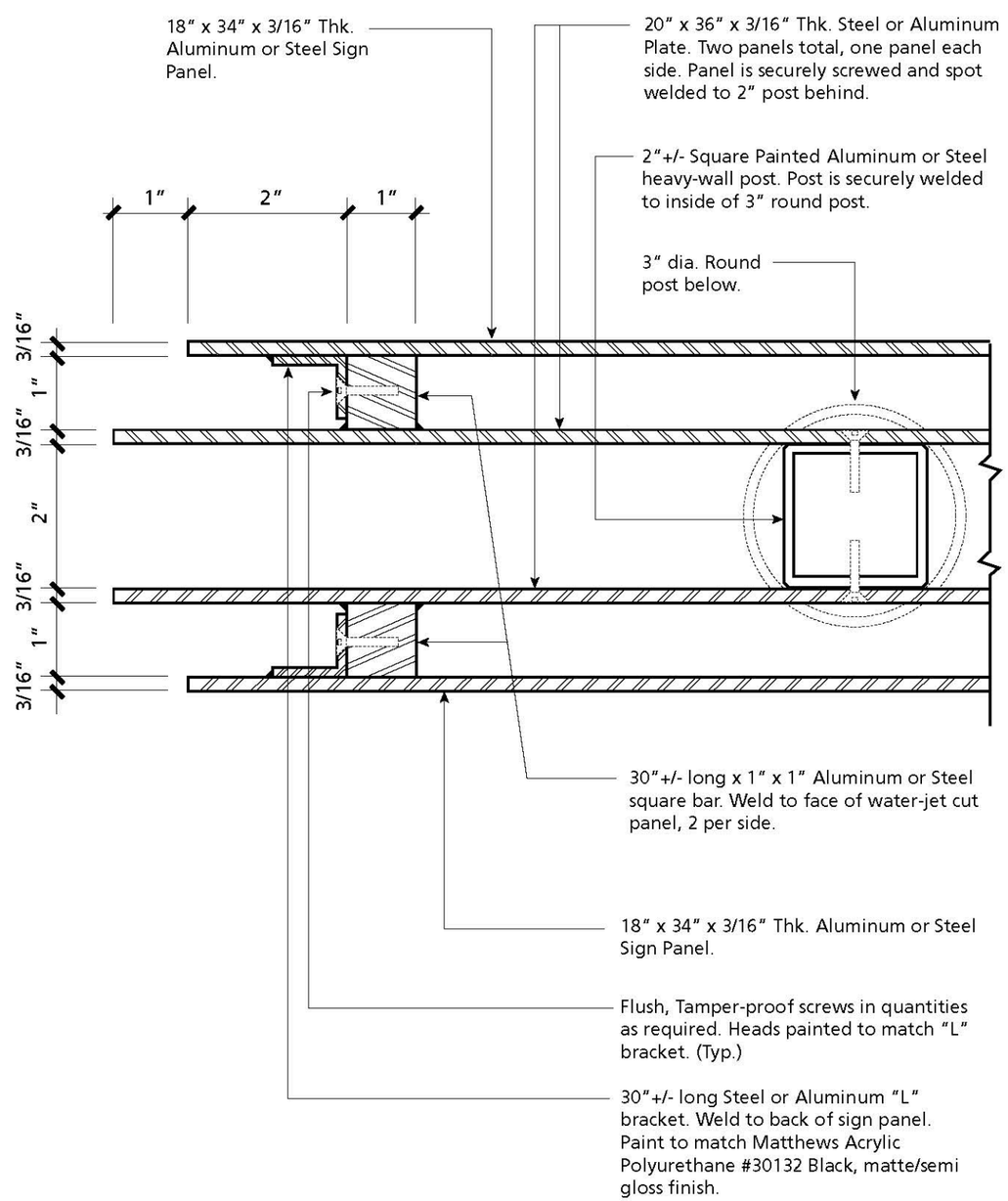

5 W-PED Pedestrian Directional Sign - Partial Horizontal Section A-A
Scale: Half Actual Size

Sign Type: **W-PED**

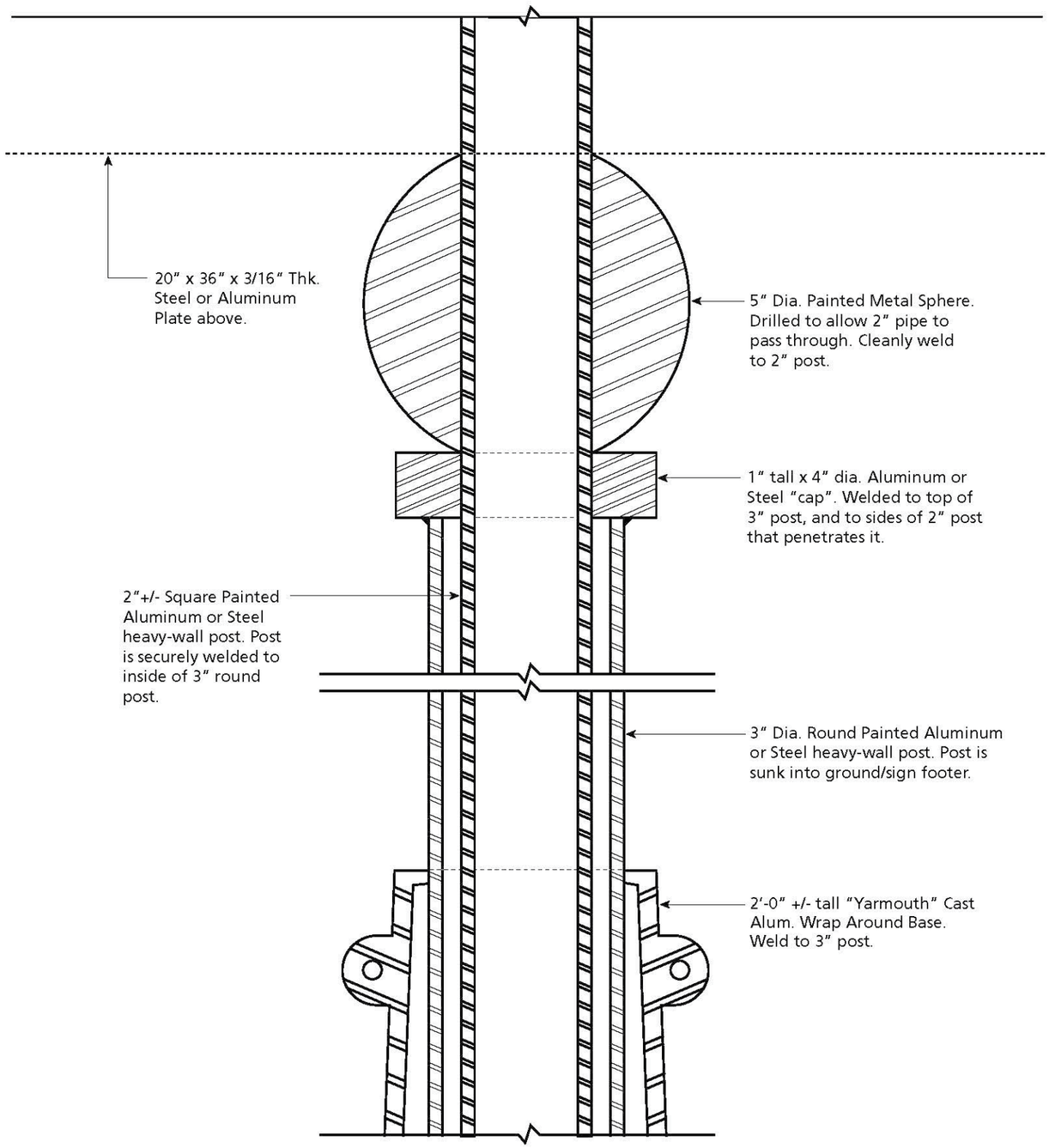

6 W-PED Pedestrian Directional Sign - Partial Vertical Section B-B
Scale: Half Actual Size

Sign Type: **W-PED**

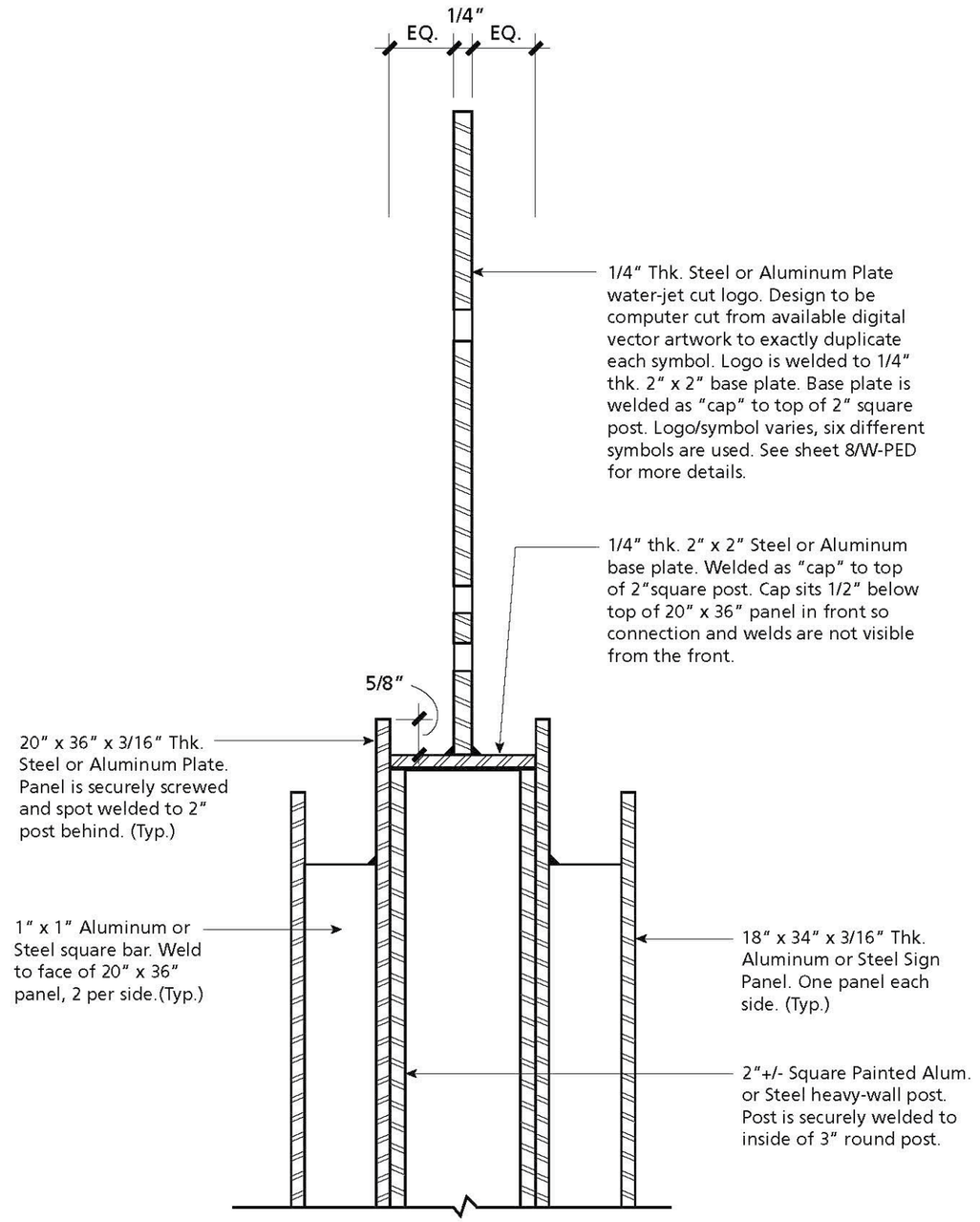

7 W-PED Pedestrian Directional Sign - Partial Vertical Section C-C
Scale: Half Actual Size

Sign Type: **W-PED**

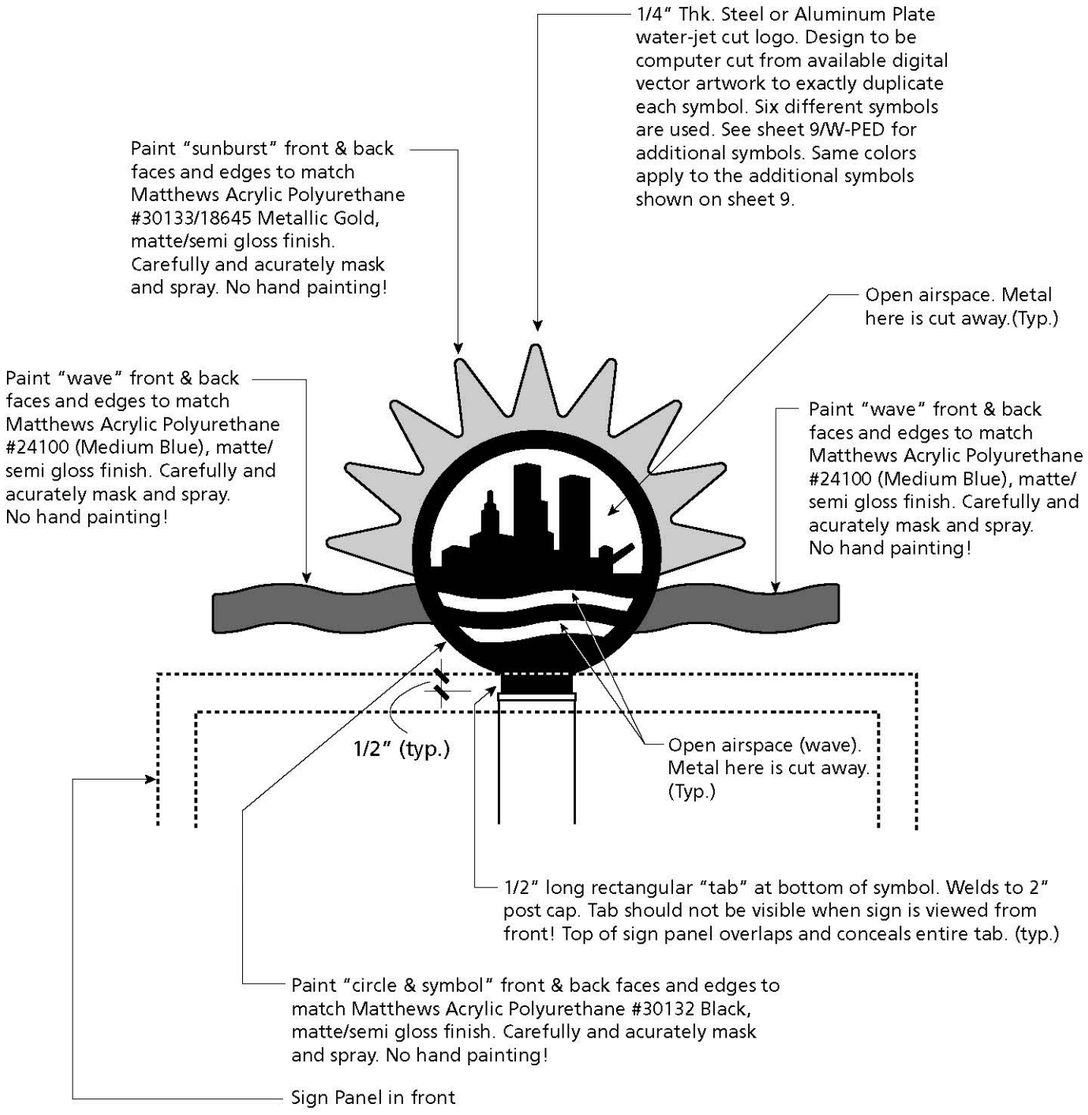

**Note:
Symbol is water-jet cut out of (1) piece of metal plate. Color breaks are achieved by carefully masking and spraying "waves" and "sunburst". Router/laser cut masking from digital files should be used for precision. (1) sample must be supplied and approved for quality of metalwork and paint finish prior to full production.
See sheets 9/W-PED and 10/W-PED for additional symbol layouts.

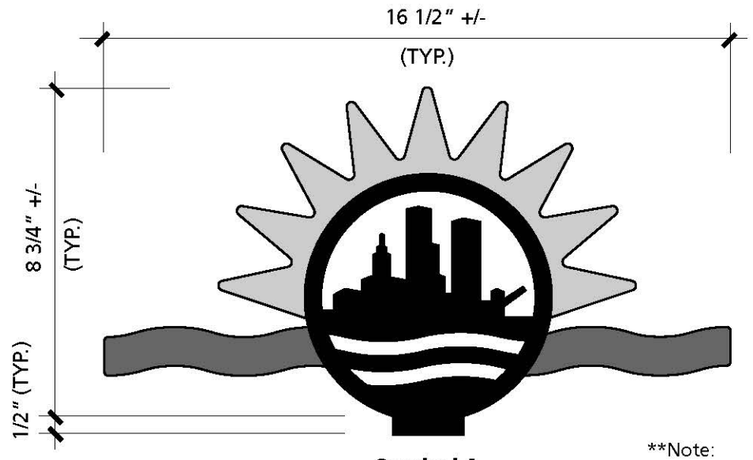

Symbol A

**Note:
See sheet 8/W-PED for all specifications.
See sheet 10/W-PED for additional symbols. Symbols pictured were in final development at time of spec. document. Please obtain final versions from City prior to manufacture.

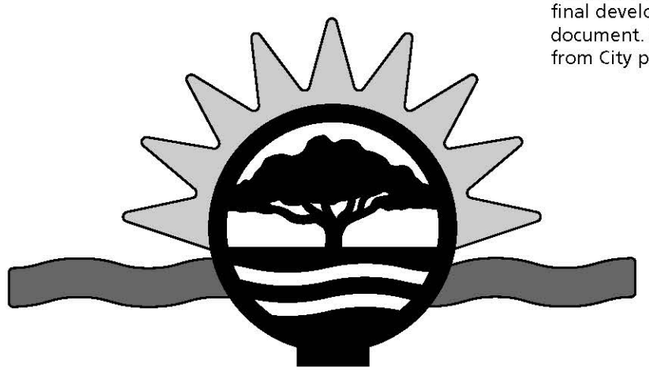

Symbol B

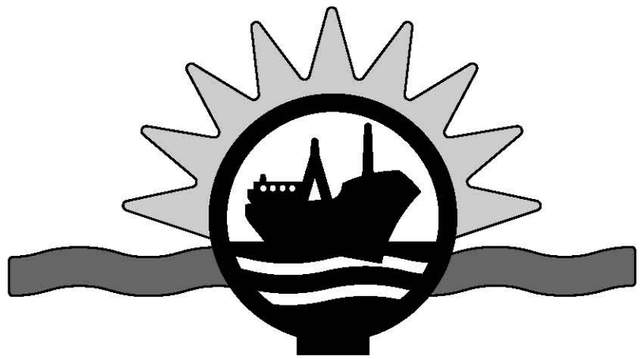

Symbol C

Symbol D

Symbol E

Symbol F

**Note:
See sheet 8/W-PED for all specifications. See sheet 9/W-PED for additional symbols. Symbols pictured were in final development at time of spec. document. Please obtain final versions from City prior to manufacture.

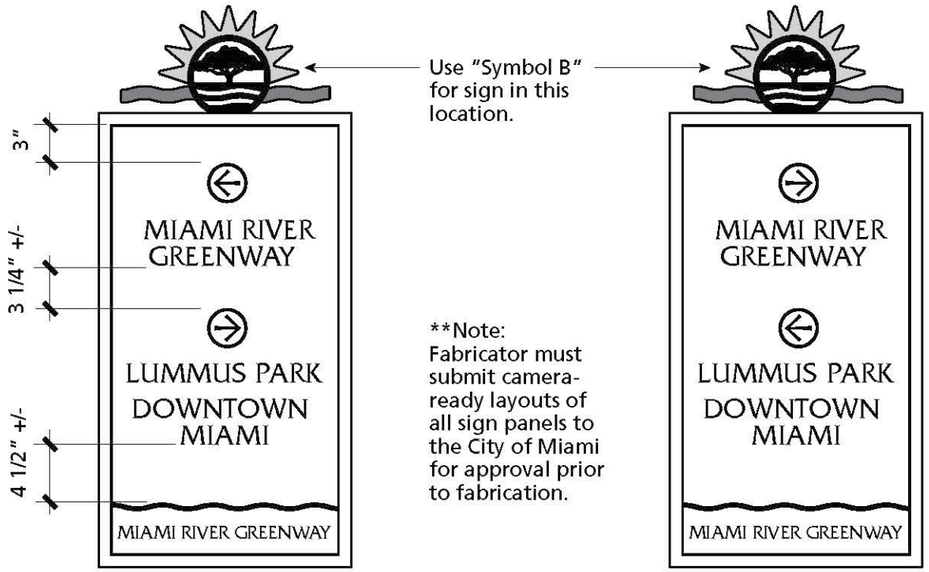

Sign Panel Side 1

Sign Panel Side 2

**Note:
Fabricator must submit camera-ready layouts of all sign panels to the City of Miami for approval prior to fabrication.

Sign Message W-PED-01

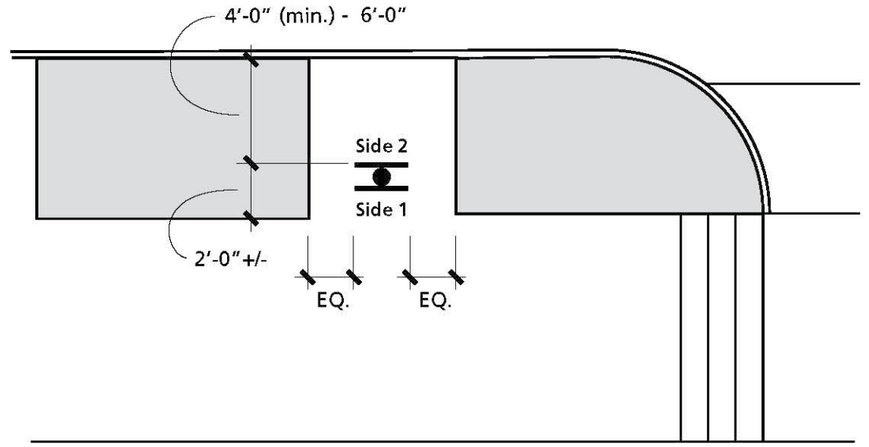

Sign Location W-PED-01

**Note:
See "Signing and Marking" plans for site sign locations. Diagram here is for install dimensions and orientation.

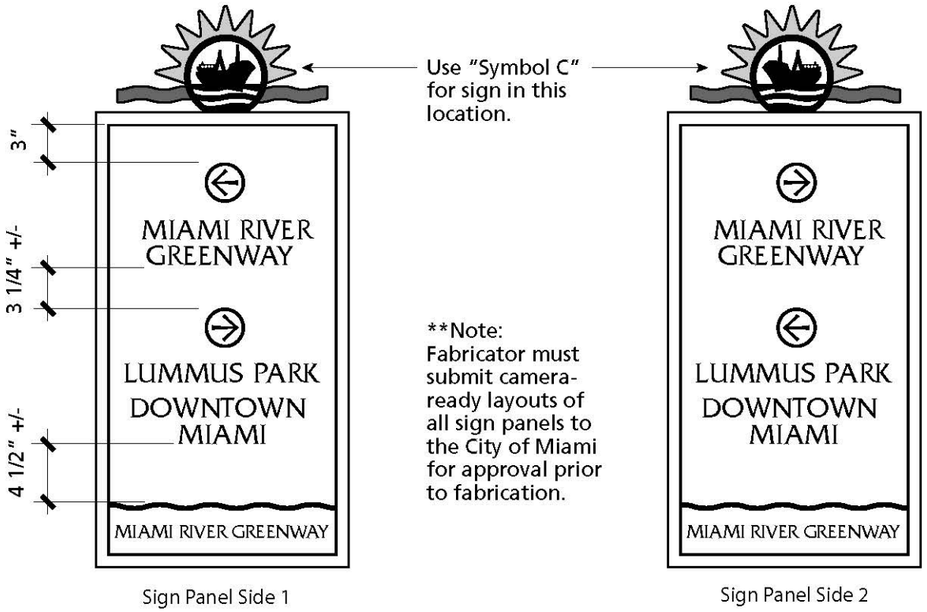

Sign Panel Side 1

Sign Panel Side 2

Sign Message W-PED-02

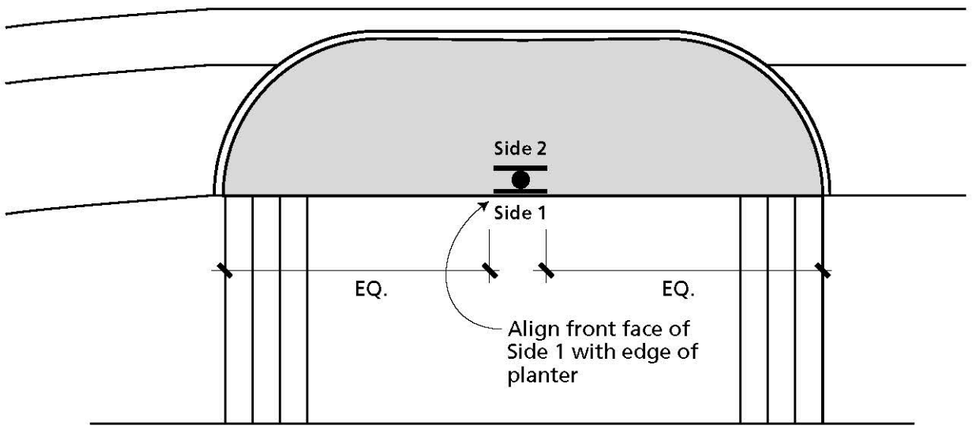

Sign Location W-PED-02

**Note:
See "Signing and Marking" plans for site sign locations. Diagram here is for install dimensions and orientation.

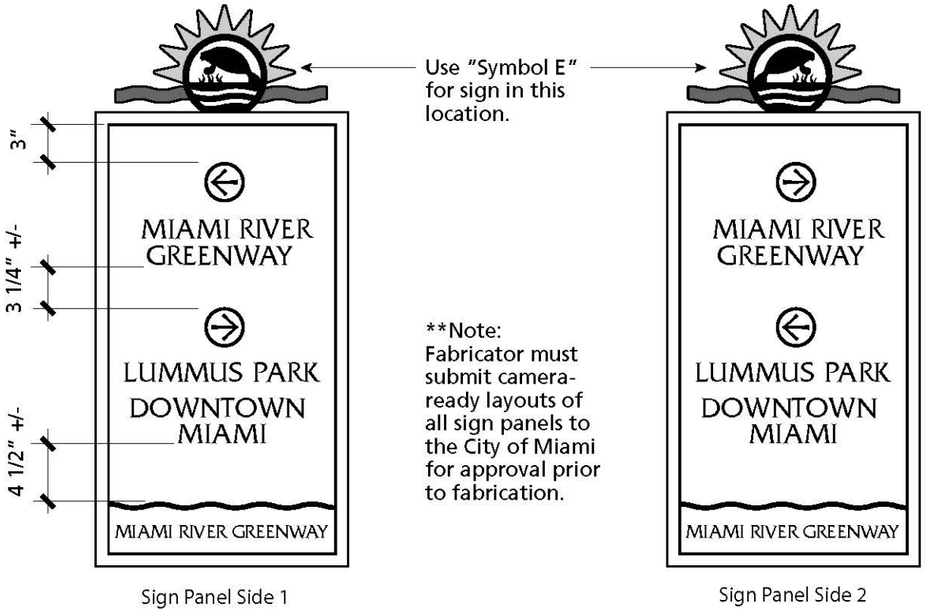

Sign Panel Side 1

Sign Panel Side 2

Sign Message W-PED-03

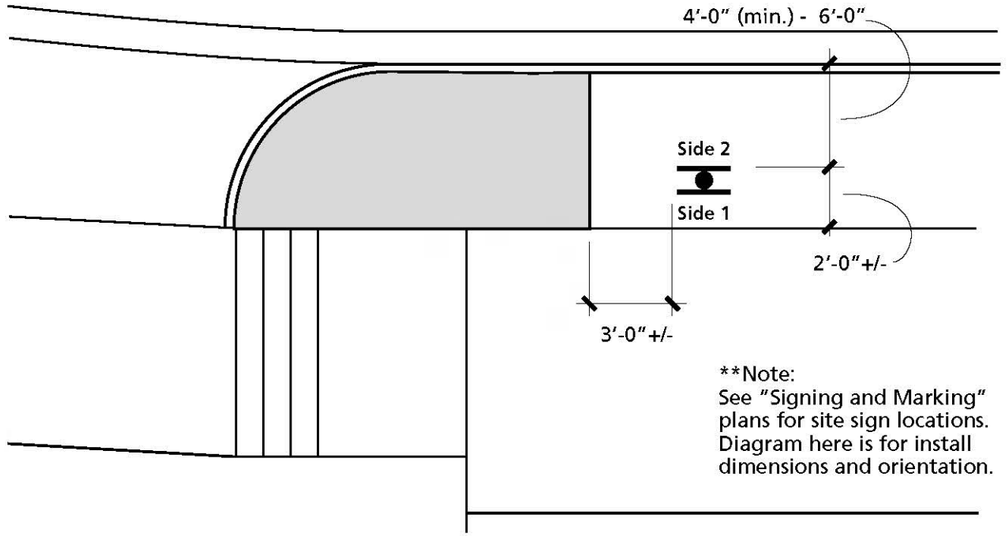

Sign Location W-PED-03

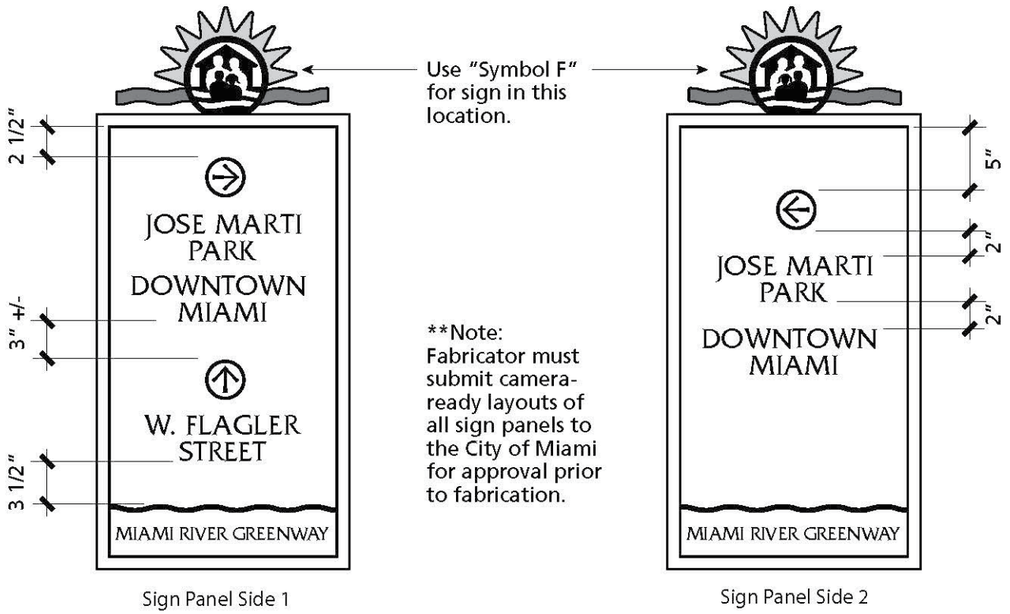

Sign Message W-PED-04

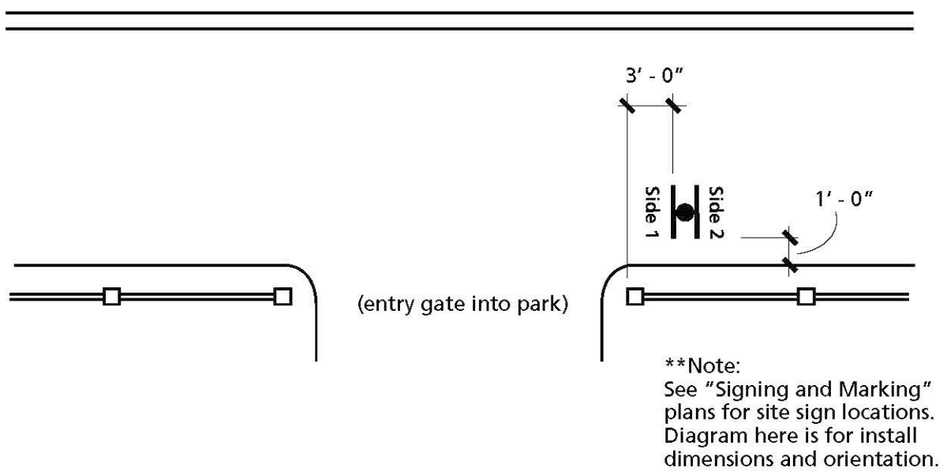

Sign Location W-PED-04

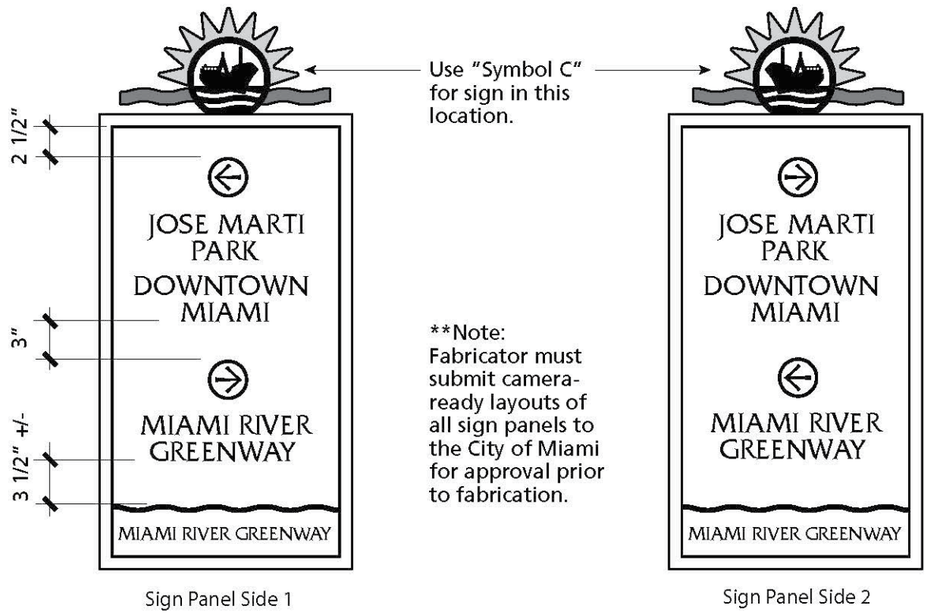

Sign Message W-PED-05

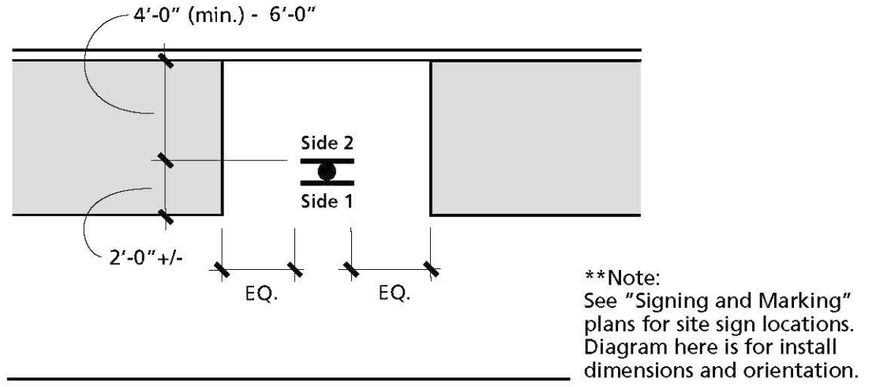

Sign Location W-PED-05

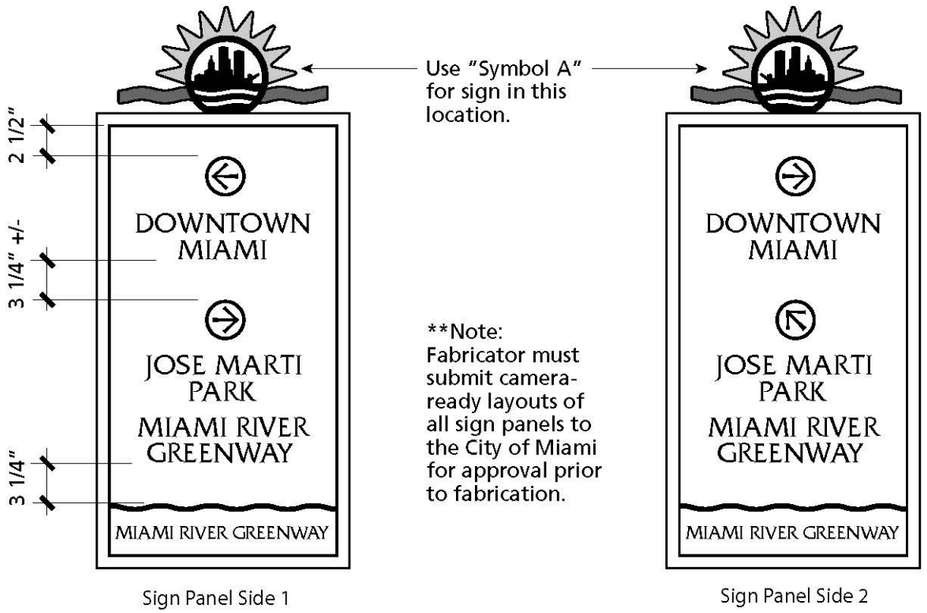

Sign Panel Side 1

Sign Panel Side 2

Sign Message W-PED-06

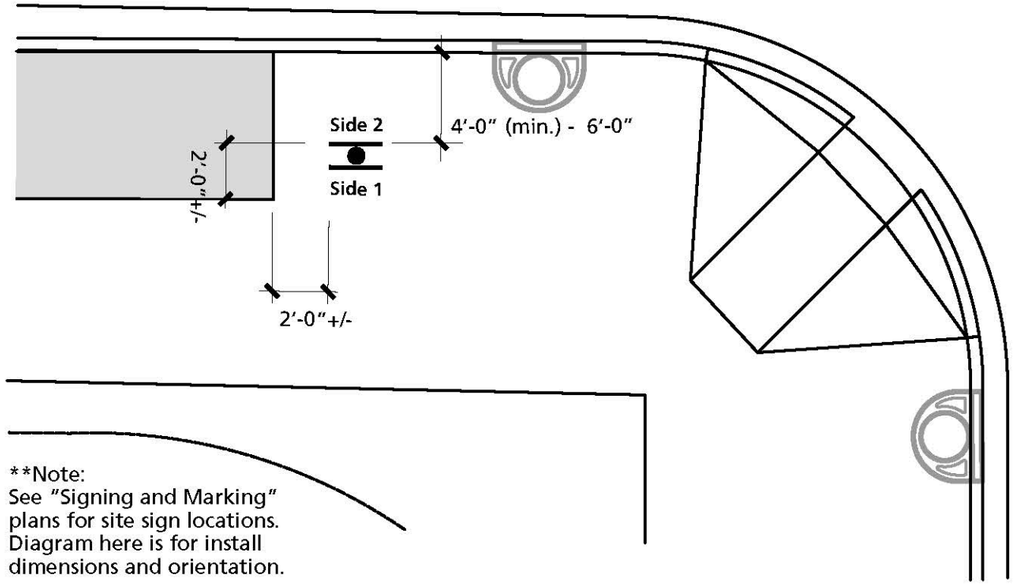

Sign Location W-PED-06

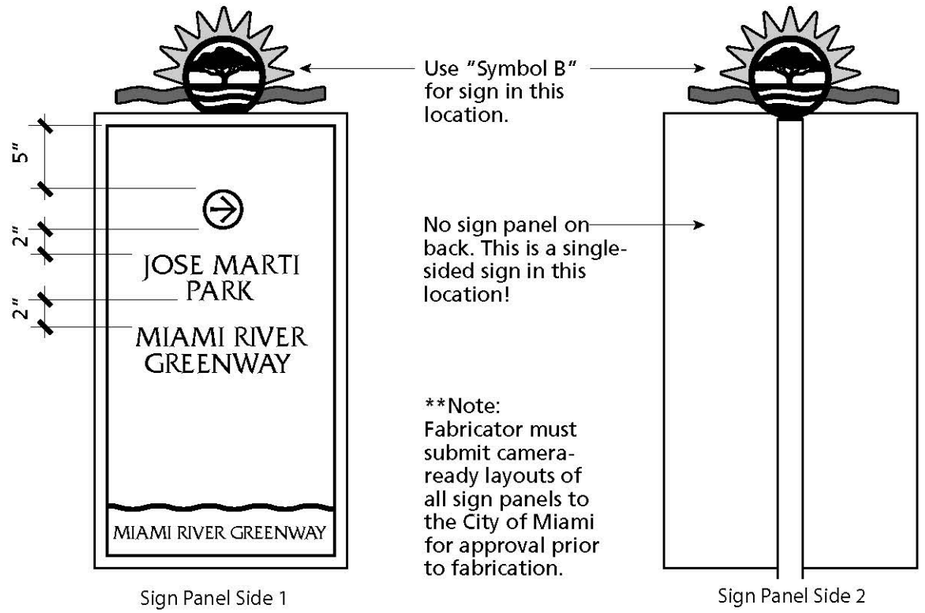

Sign Panel Side 1

Sign Panel Side 2

Sign Message W-PED-07

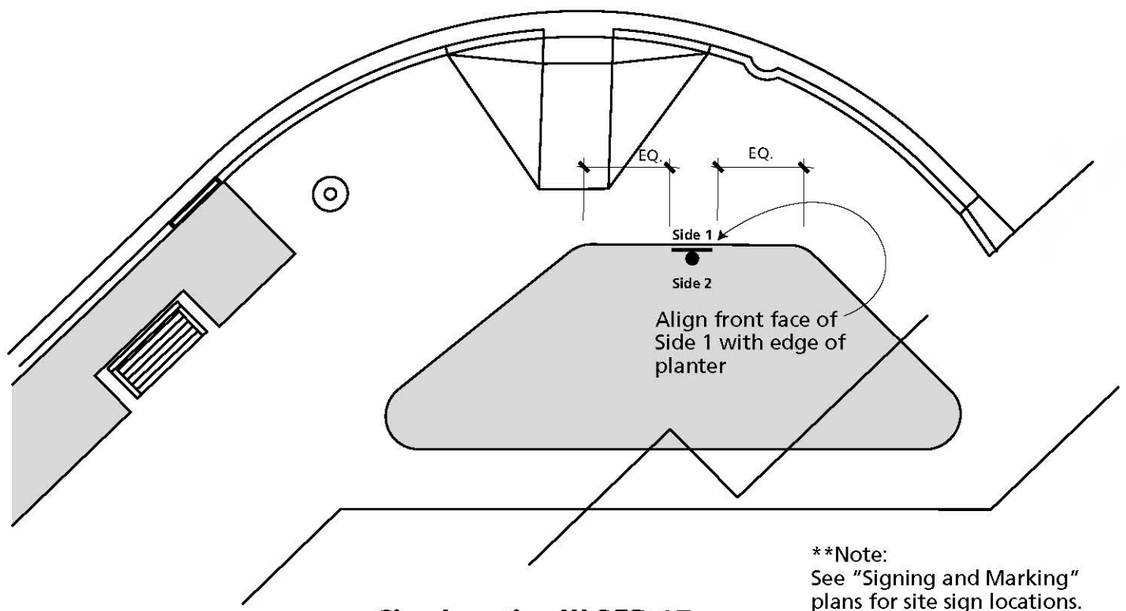

Sign Location W-PED-07

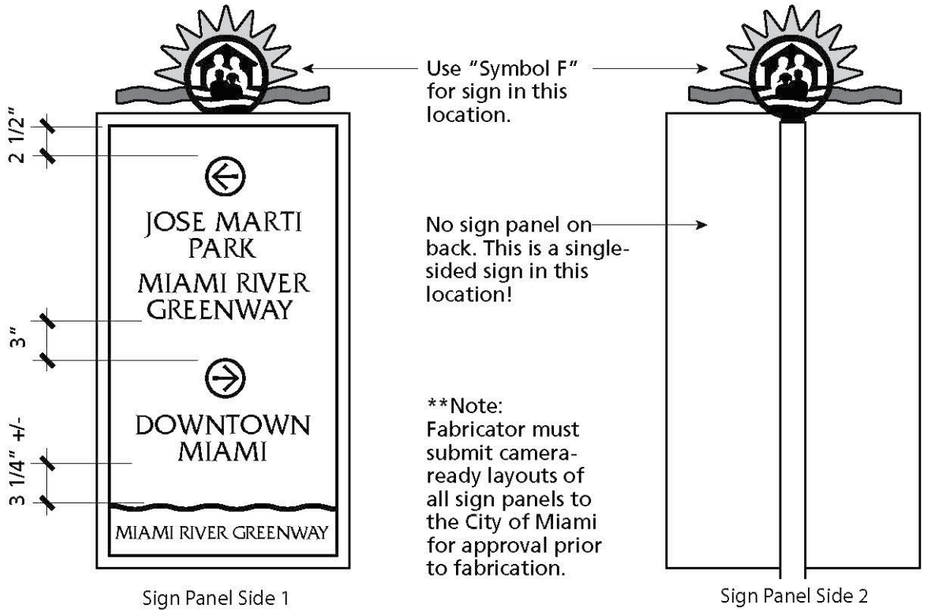

Sign Panel Side 1

Sign Panel Side 2

Sign Message W-PED-08

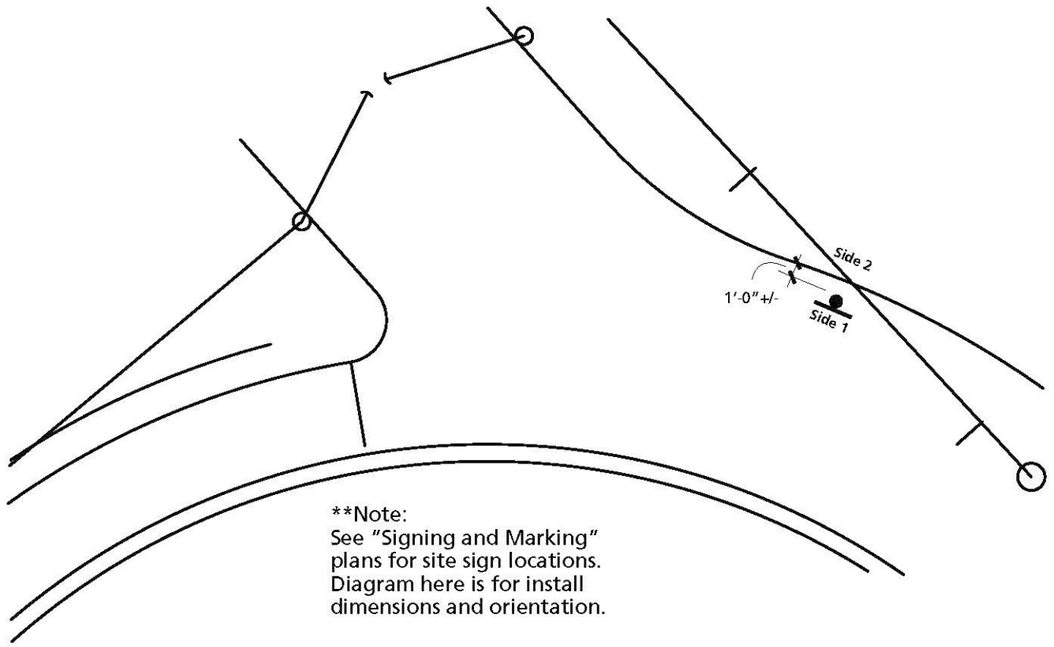

**Note:
See "Signing and Marking" plans for site sign locations. Diagram here is for install dimensions and orientation.

Sign Location W-PED-08

18
W-PED

Pedestrian Directional Sign - Sign Messages & Locations
Scale: No Scale

Sign Type: **W-PED**

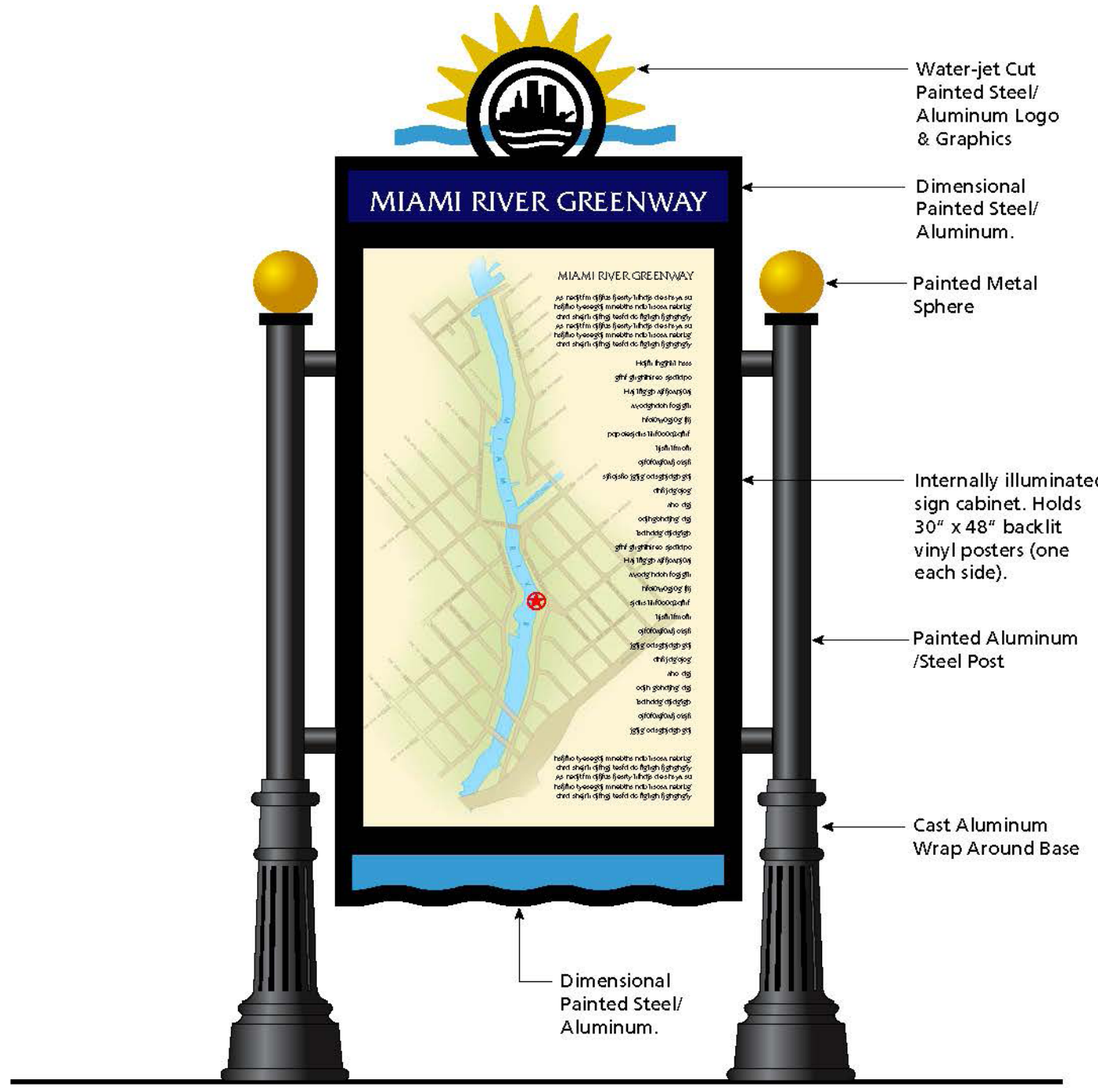

Front Elevation

**Note:
This is a double-sided sign.
Back elevation is similar.

1
W-KSK

Pedestrian Kiosk - Overview
Scale: 1" = 1'-0"

Sign Type: **W-KSK**

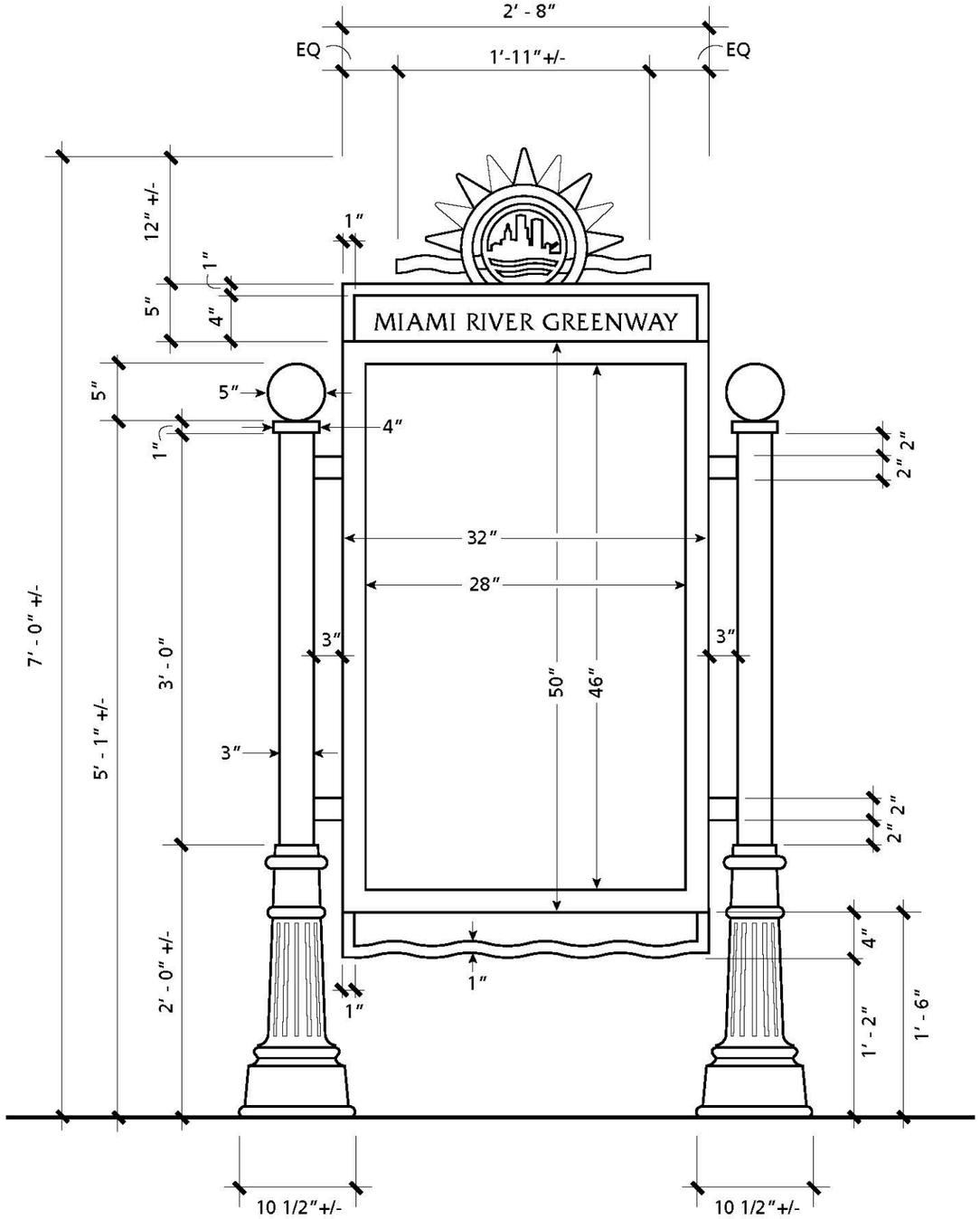

2 W-KSK

Pedestrian Kiosk - Overall Dimensions
Scale: 1″= 1′-0″

Sign Type: **W-KSK**

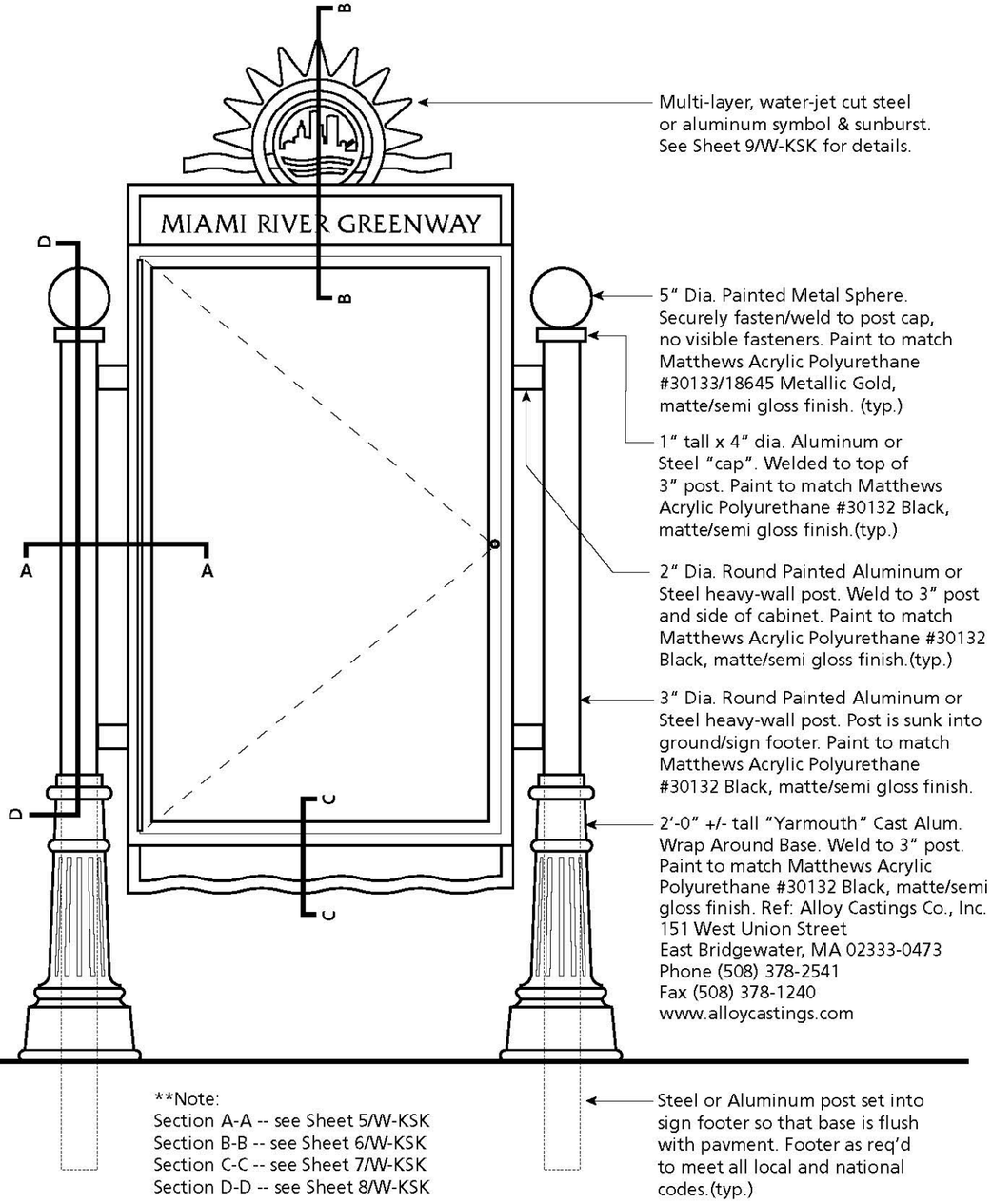

Multi-layer, water-jet cut steel or aluminum symbol & sunburst. See Sheet 9/W-KSK for details.

5″ Dia. Painted Metal Sphere. Securely fasten/weld to post cap, no visible fasteners. Paint to match Matthews Acrylic Polyurethane #30133/18645 Metallic Gold, matte/semi gloss finish. (typ.)

1″ tall x 4″ dia. Aluminum or Steel "cap". Welded to top of 3″ post. Paint to match Matthews Acrylic Polyurethane #30132 Black, matte/semi gloss finish.(typ.)

2″ Dia. Round Painted Aluminum or Steel heavy-wall post. Weld to 3″ post and side of cabinet. Paint to match Matthews Acrylic Polyurethane #30132 Black, matte/semi gloss finish.(typ.)

3″ Dia. Round Painted Aluminum or Steel heavy-wall post. Post is sunk into ground/sign footer. Paint to match Matthews Acrylic Polyurethane #30132 Black, matte/semi gloss finish.

2′-0″ +/- tall "Yarmouth" Cast Alum. Wrap Around Base. Weld to 3″ post. Paint to match Matthews Acrylic Polyurethane #30132 Black, matte/semi gloss finish. Ref: Alloy Castings Co., Inc.
151 West Union Street
East Bridgewater, MA 02333-0473
Phone (508) 378-2541
Fax (508) 378-1240
www.alloycastings.com

Steel or Aluminum post set into sign footer so that base is flush with pavment. Footer as req'd to meet all local and national codes.(typ.)

**Note:
Section A-A -- see Sheet 5/W-KSK
Section B-B -- see Sheet 6/W-KSK
Section C-C -- see Sheet 7/W-KSK
Section D-D -- see Sheet 8/W-KSK

3 W-KSK

Pedestrian Kiosk - Materials & Colors:Part 1
Scale: 1″= 1′-0″

Sign Type: **W-KSK**

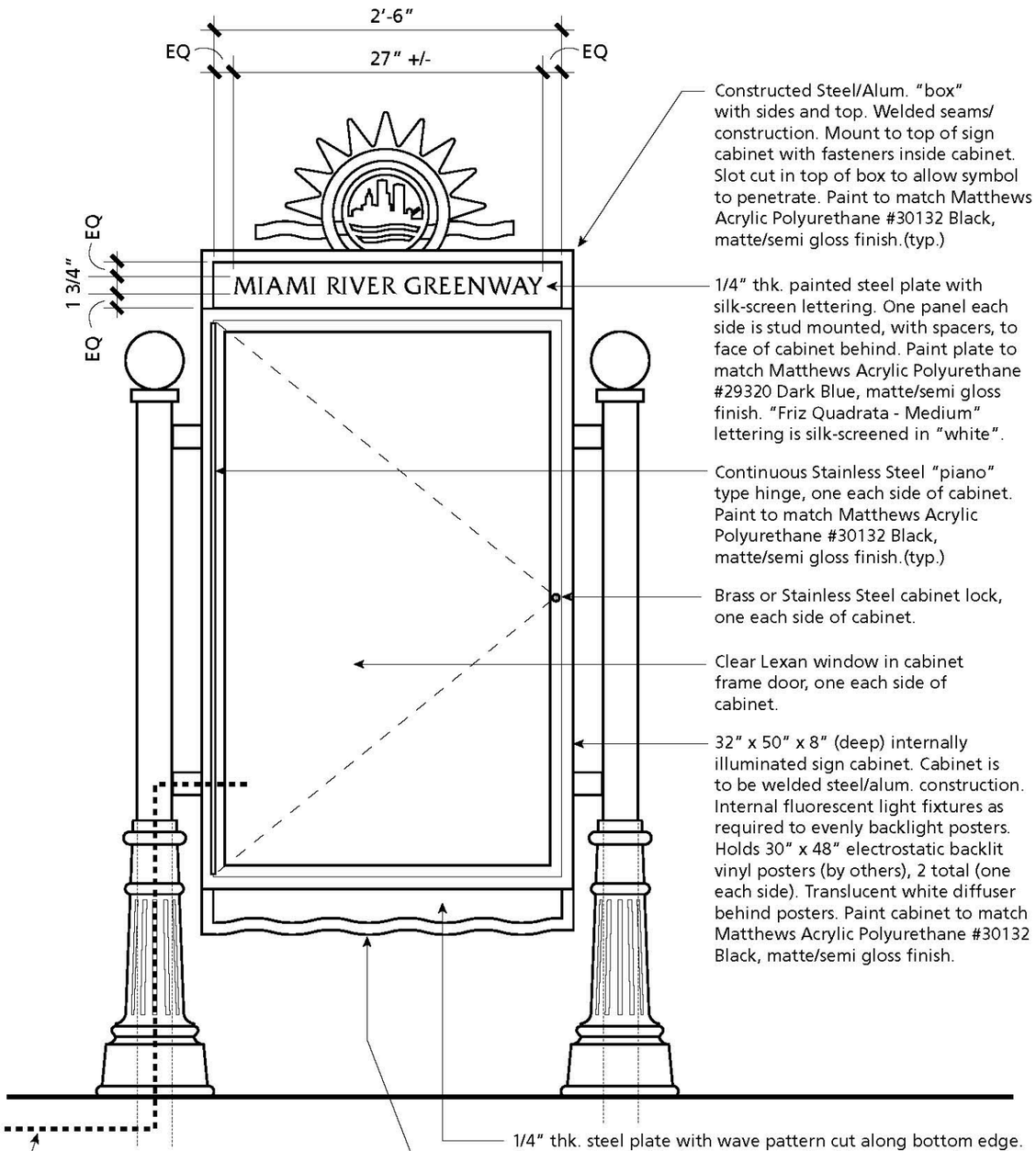

4 W-KSK Pedestrian Kiosk - Materials & Colors: Part 2
Scale: 1" = 1'-0"

Sign Type: **W-KSK**

NOTE:
INTERNAL STRUCTURE AS REQUIRED. CABINET IS TO BE WELDED STEEL CONSTRUCTION. NO VISIBLE FASTENERS OR SCREWS. VENTILATION AND WEEP HOLES AS REQ'D ELECTRICAL CABLING TO RUN THROUGH HOLLOW LEG OF DIRECTORY, NO VISIBLE CABLING. ALL BALLASTS ETC. TO BE INTERNAL. NO VISIBLE SIGN COMPANY/REGULATORY STICKERS ANYWHERE ON SIGN.

SECTION IS FOR DESIGN INTENT ONLY! SIGN FABRICATOR TO PROVIDE SHOP DRAWINGS AND ALL ACTUAL CONSTRUCTION DETAILS REQ'D TO BUILD THIS SIGN TO THE INTENT SHOWN.

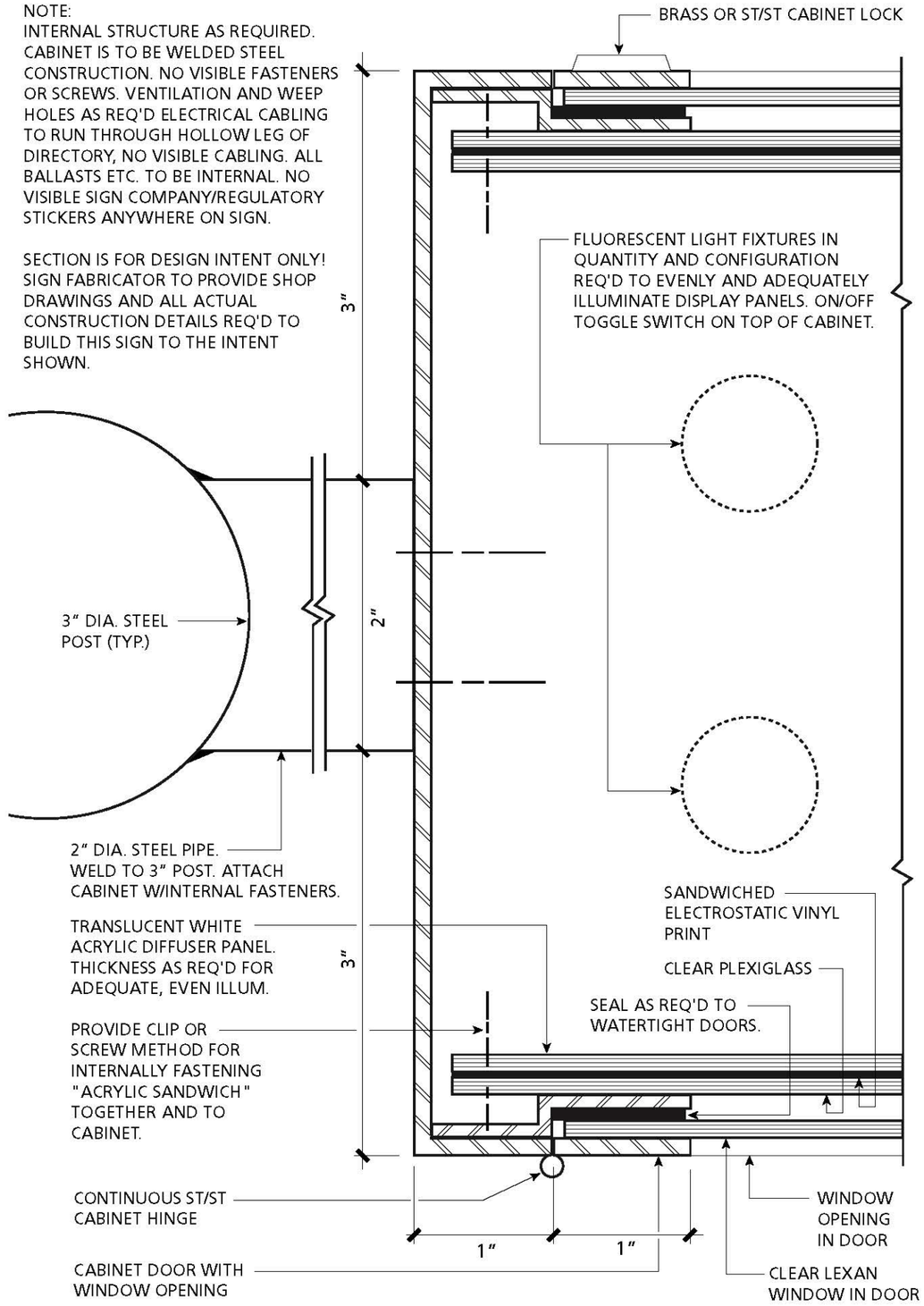

5 W-KSK Pedestrian Kiosk - Partial Horizontal Section A-A
Scale: Actual Size

Sign Type: **W-KSK**

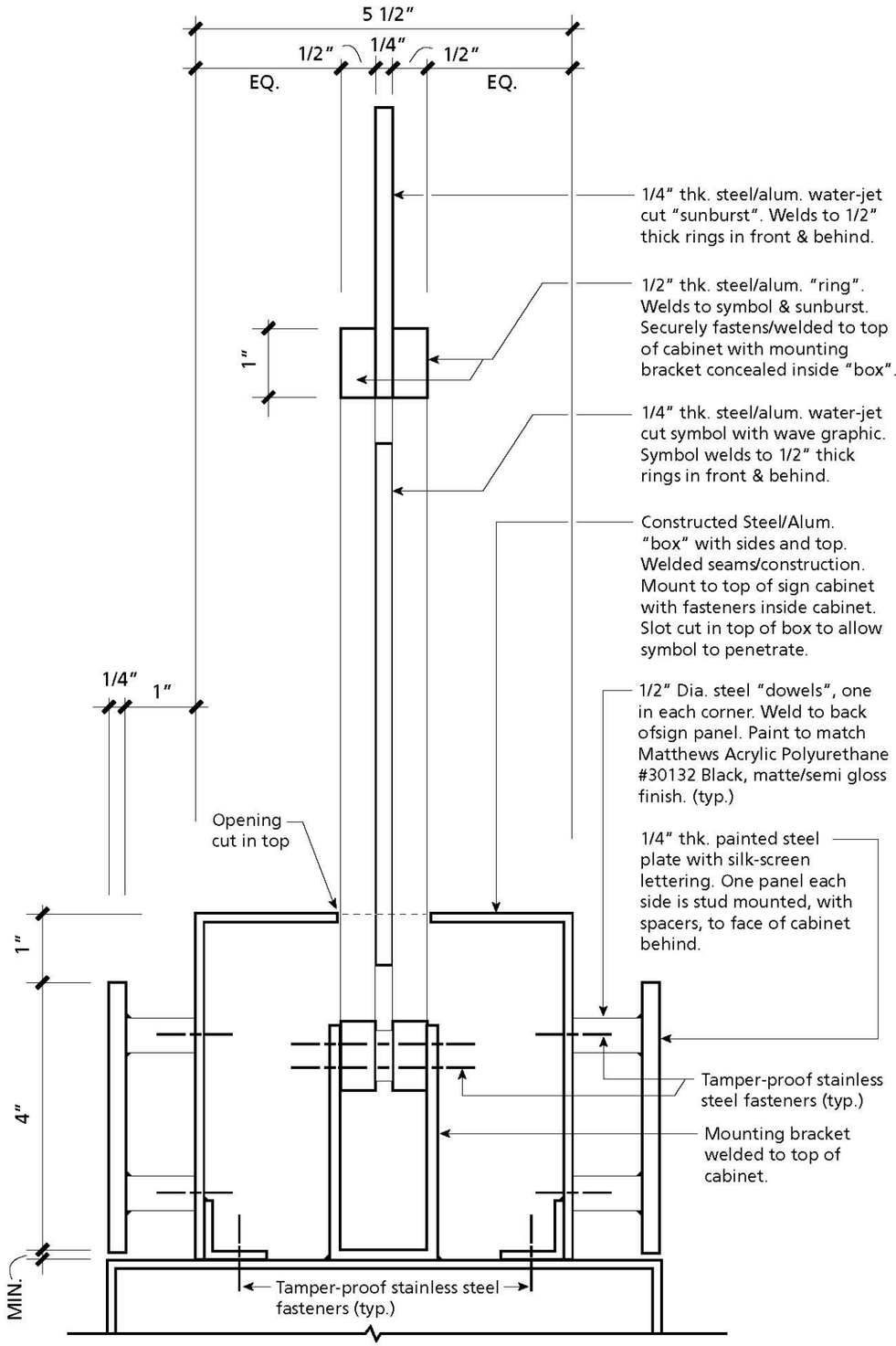

6
W-KSK

Pedestrian Kiosk - Partial Vertical Section B-B
Scale: Half Actual Size

Sign Type: **W-KSK**

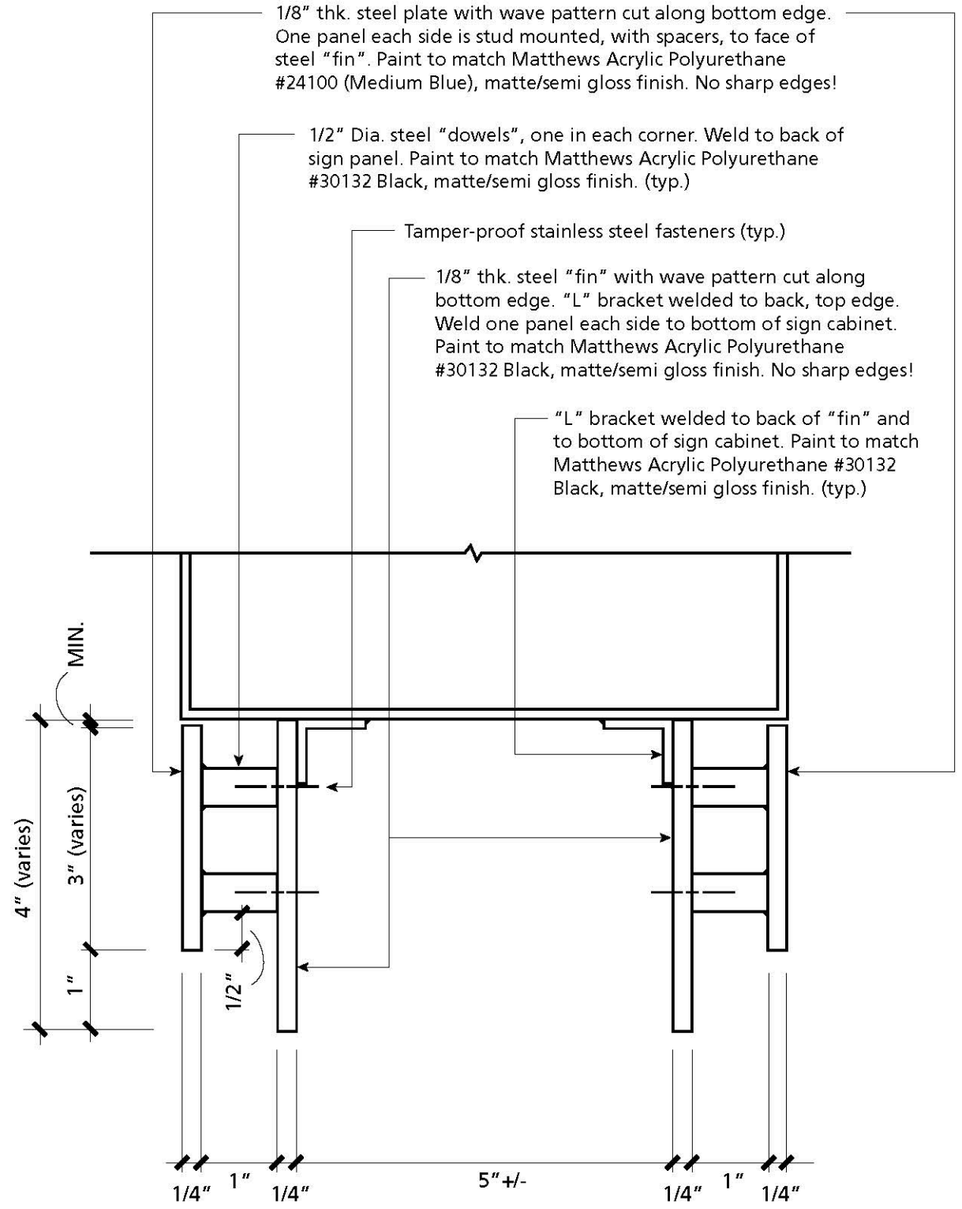

7
W-KSK

Pedestrian Kiosk - Partial Vertical Section C-C
Scale: Half Actual Size

Sign Type: **W-KSK**

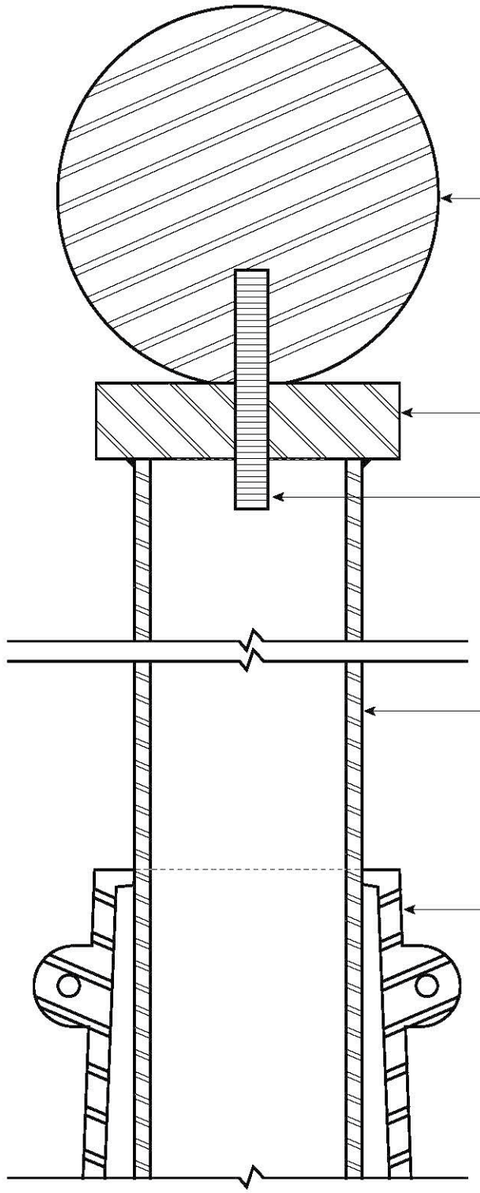

5" Dia. Painted Metal Sphere. Threaded onto steel mounting stud and secured with adhesive/ welds. Once installed, this should not be removeable!

1" tall x 4" dia. Aluminum or Steel "cap". Welded to top of 3" post.

Stainless Steel stud threaded and welded into steel cap.

3" Dia. Round Painted Aluminum or Steel heavy-wall post. Post is sunk into ground/sign footer.

2'-0" +/- tall "Yarmouth" Cast Alum. Wrap Around Base. Weld to 3" post.

8
W-KSK

Pedestrian Kiosk - Partial Vertical Section D-D
Scale: Half Actual Size

Sign Type: **W-KSK**

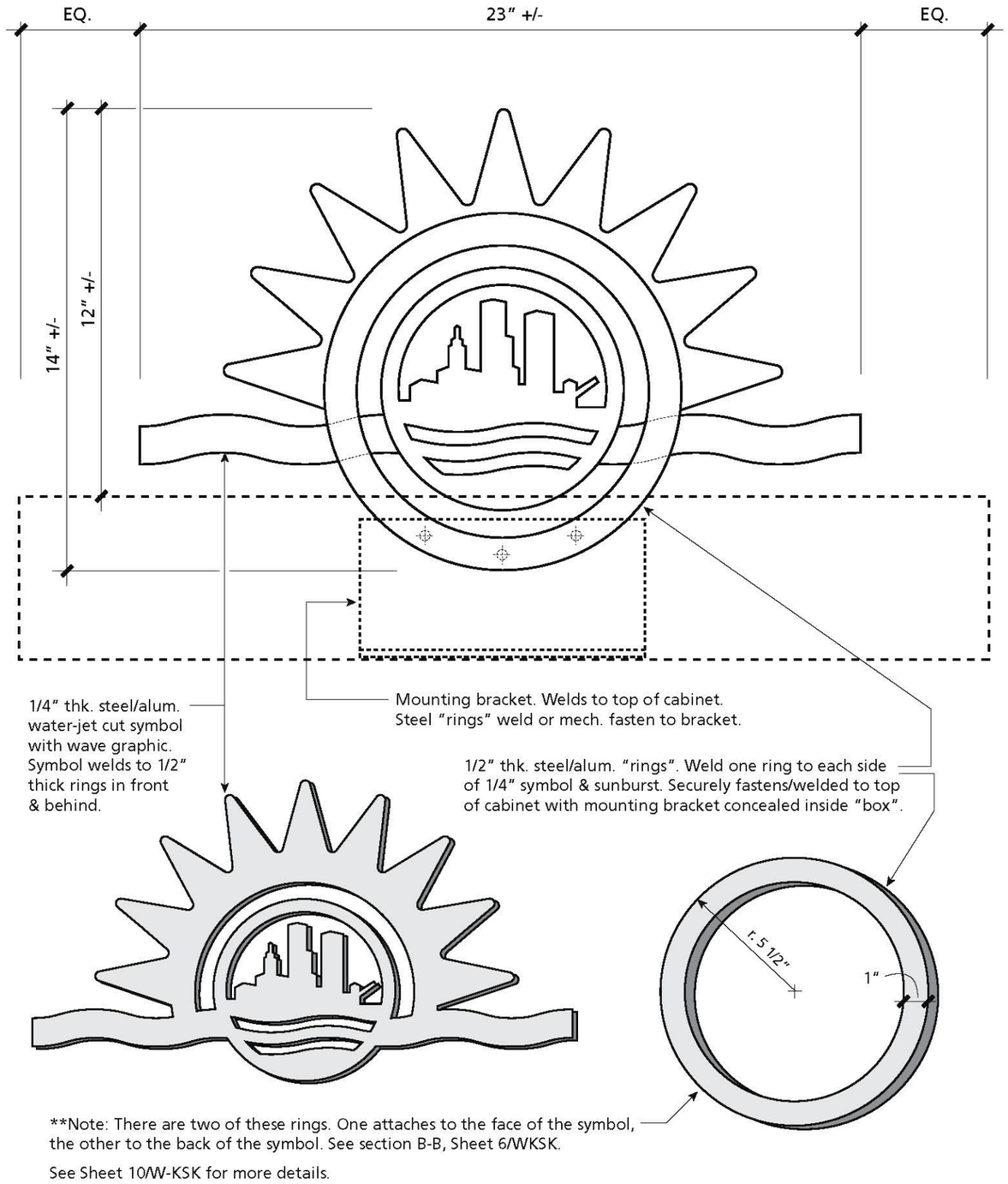

See Sheet 10/W-KSK for more details.

9
W-KSK

Pedestrian Kiosk - Symbol Construction Details
Scale: 3" = 1'-0"

Sign Type: **W-KSK**

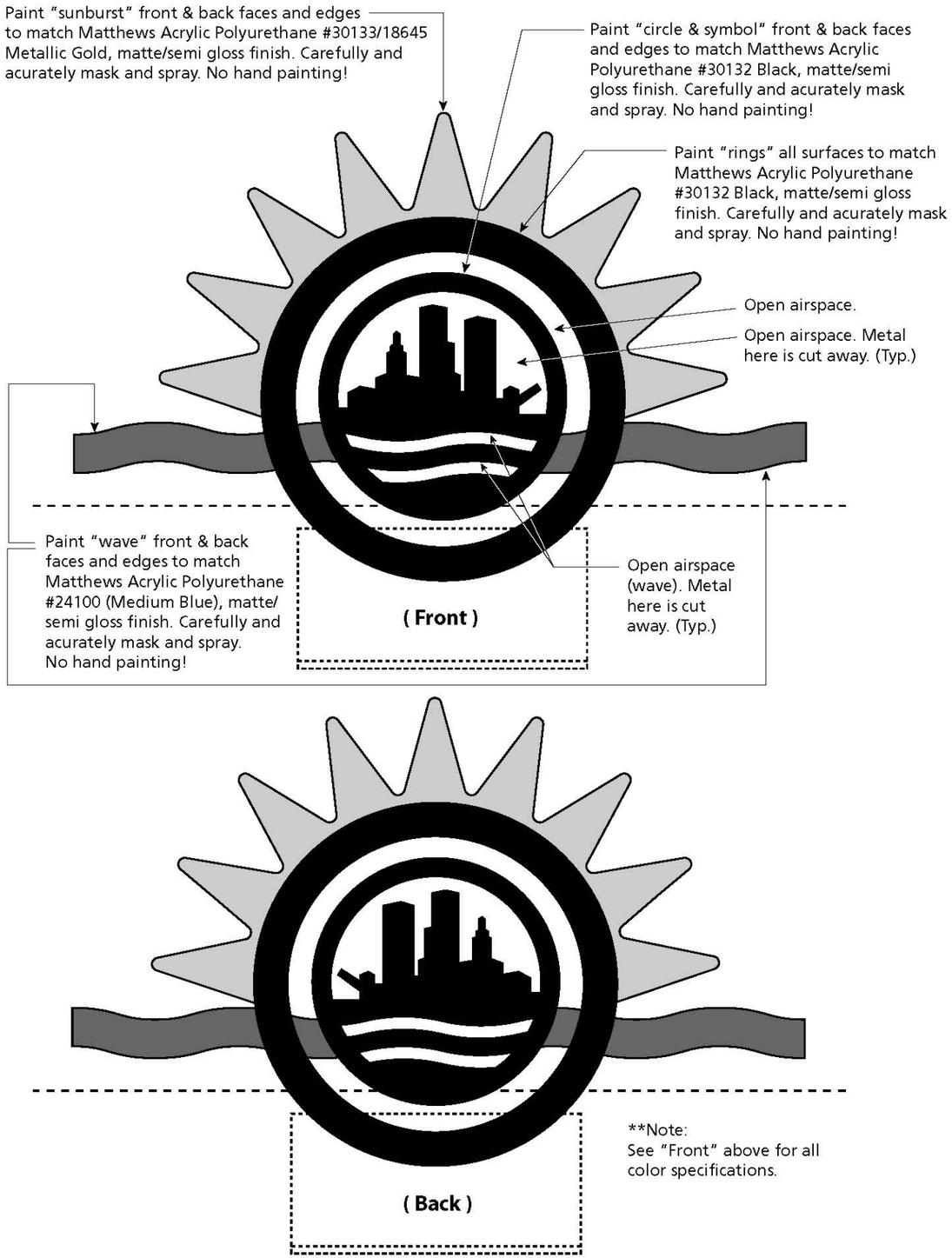

10
W-KSK

Pedestrian Kiosk - “City” Symbol Detail
Scale: 3″ = 1′-0″

Sign Type: **W-KSK**

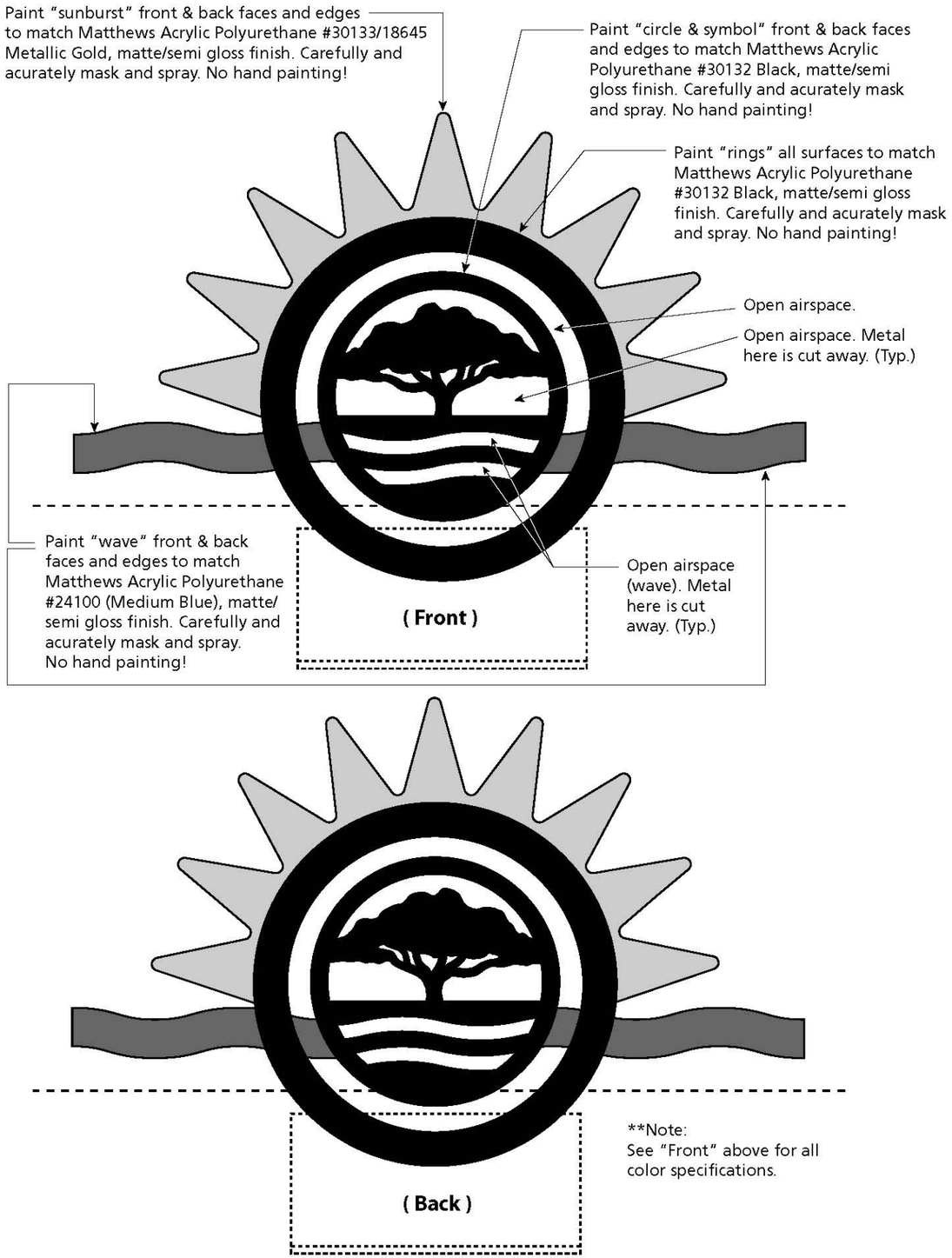

11
W-KSK

Pedestrian Kiosk - “Tree” Symbol Detail
Scale: 3″ = 1′-0″

Sign Type: **W-KSK**

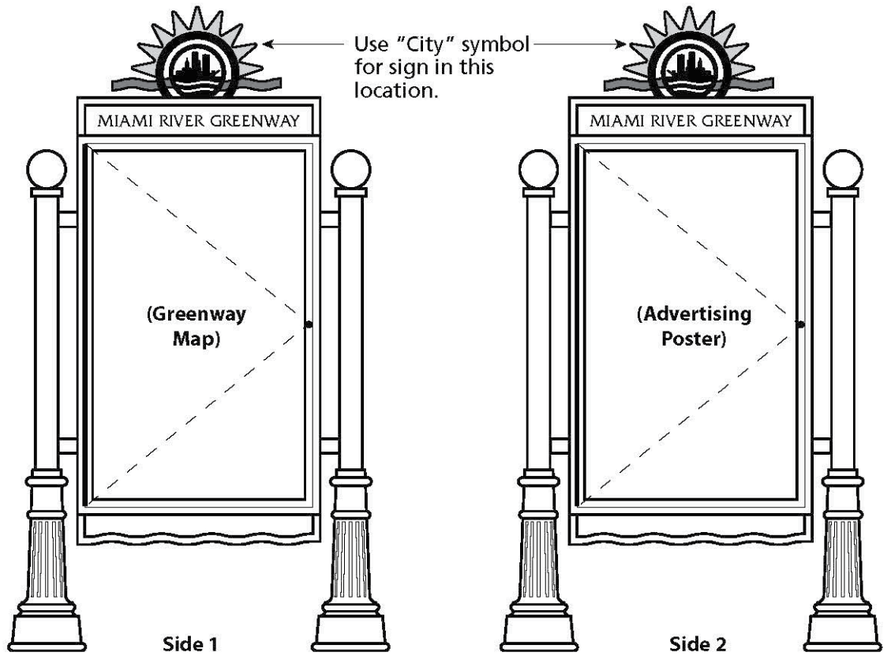

Sign Message W-KSK-01

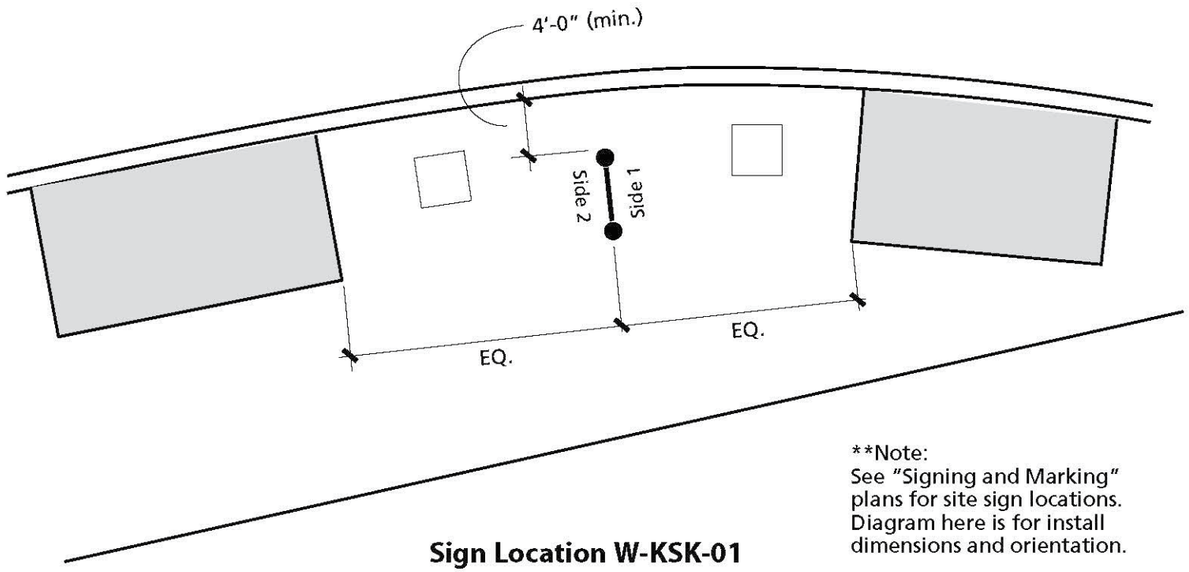

**Note:
See "Signing and Marking" plans for site sign locations. Diagram here is for install dimensions and orientation.

Sign Location W-KSK-01

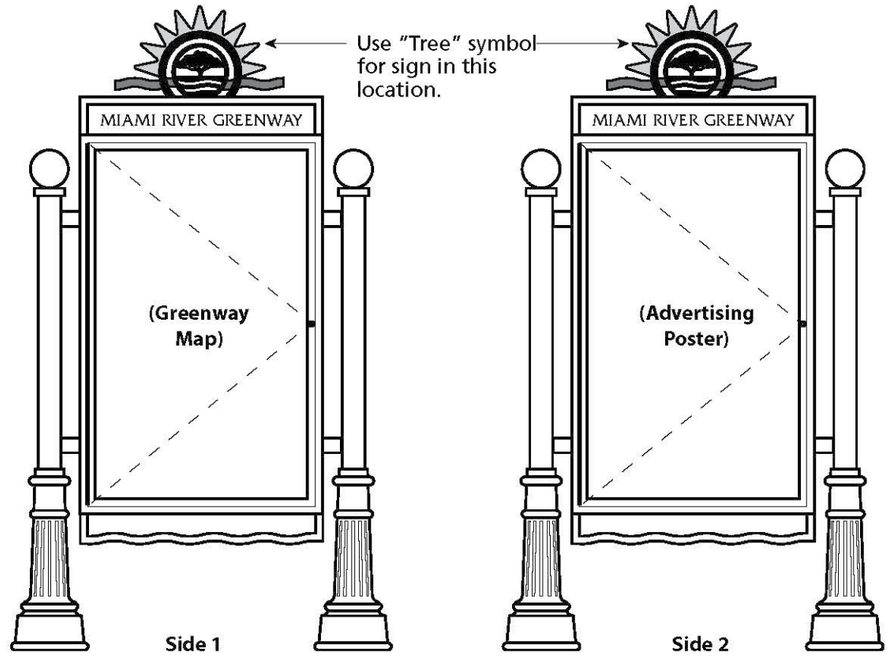

Sign Message W-KSK-02

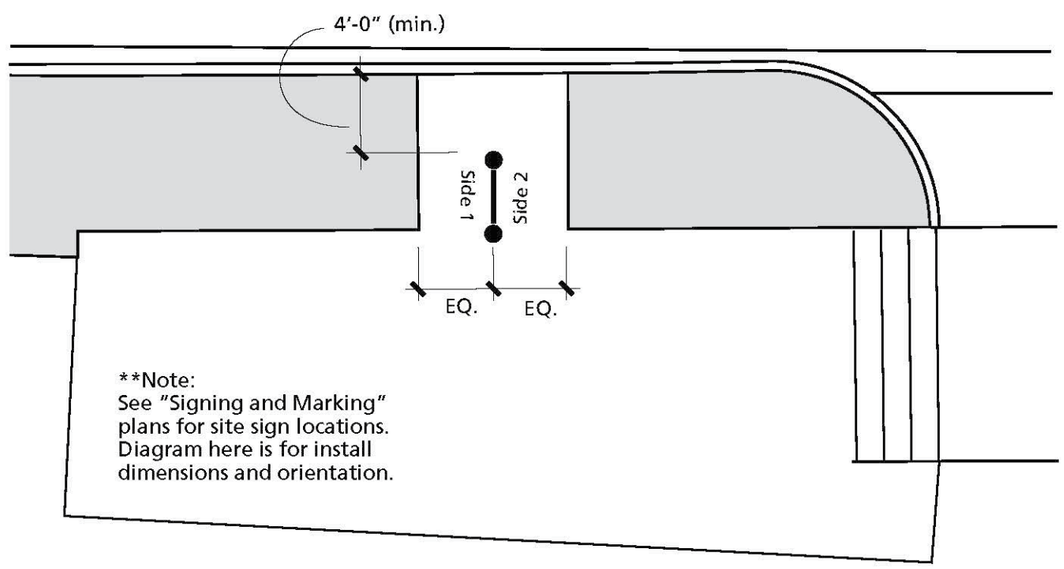

**Note:
See "Signing and Marking" plans for site sign locations. Diagram here is for install dimensions and orientation.

Sign Location W-KSK-02

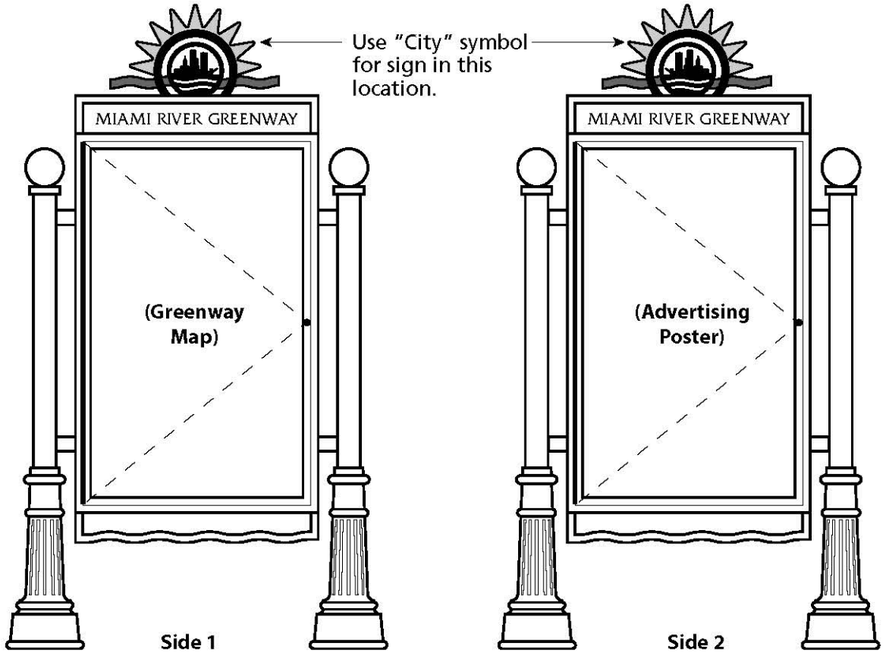

Sign Message W-KSK-03

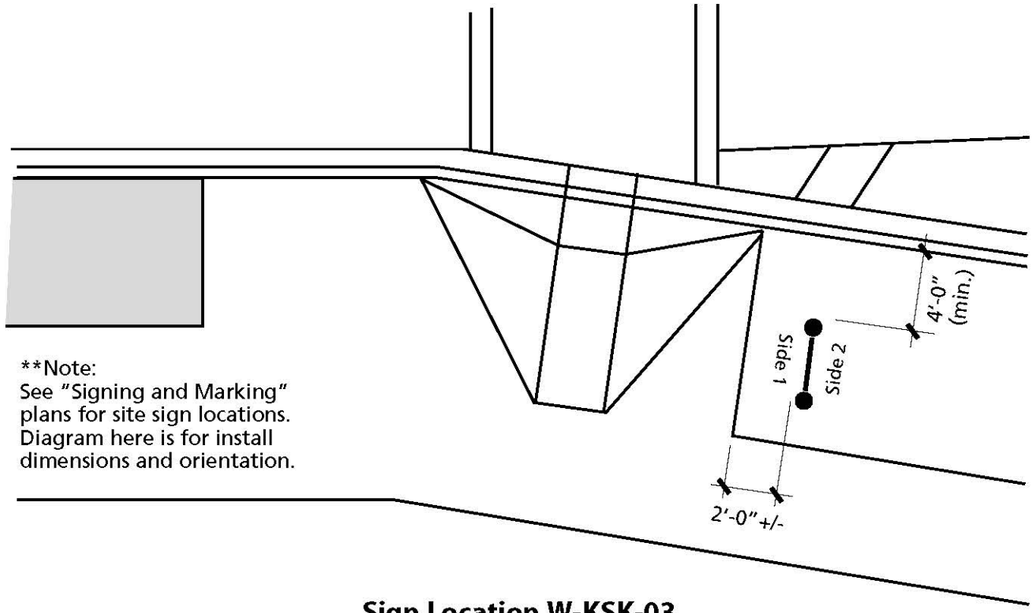

Sign Location W-KSK-03

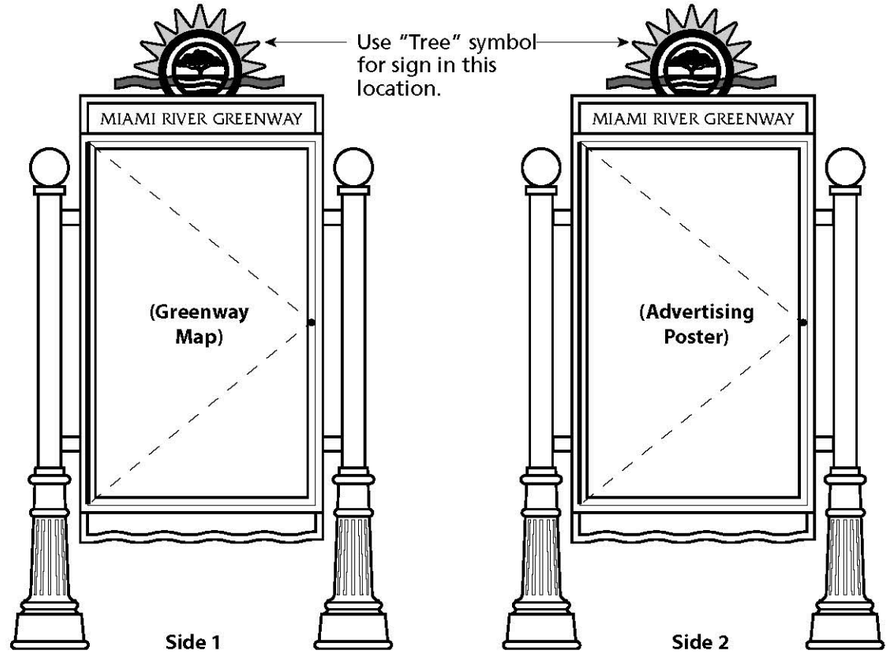

Sign Message W-KSK-04

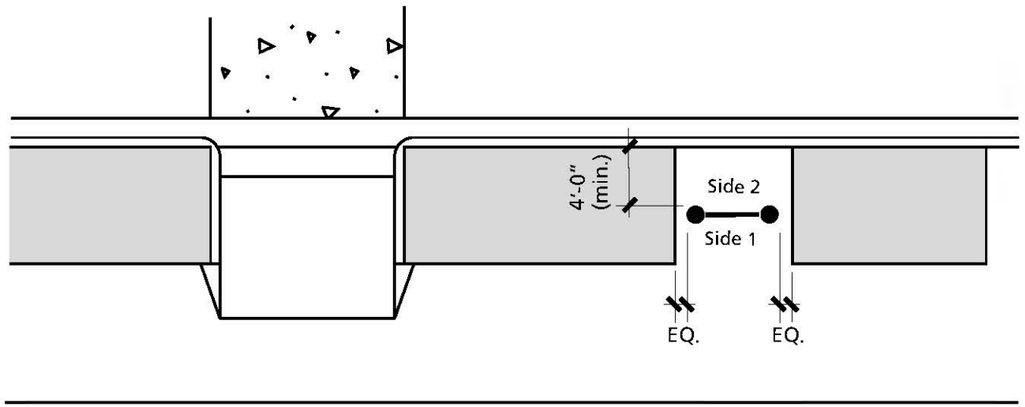

**Note:
See "Signing and Marking" plans for site sign locations. Diagram here is for install dimensions and orientation.

Sign Location W-KSK-04

**Note:
Details of this sign type are included 'for information only'. All historical marker signs will be fabricated and installed by others in locations shown. G.C. to coordinate with historical sign sub-contractor, all site conditions/work, sign footers and sign installations.

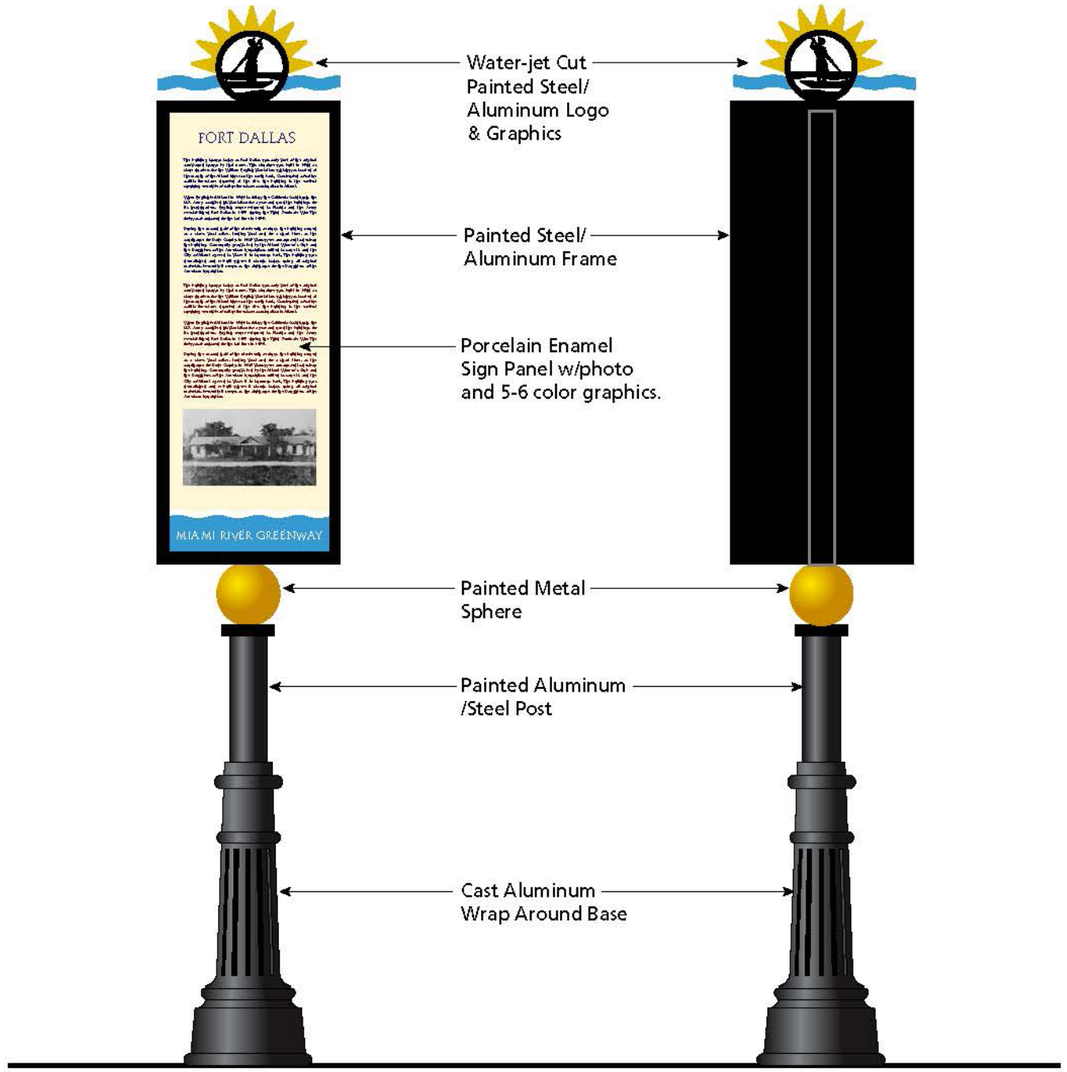

1 W-HIS — Historical Marker Sign - Overview
Scale: 1" = 1'-0"

Sign Type: **W-HIS**

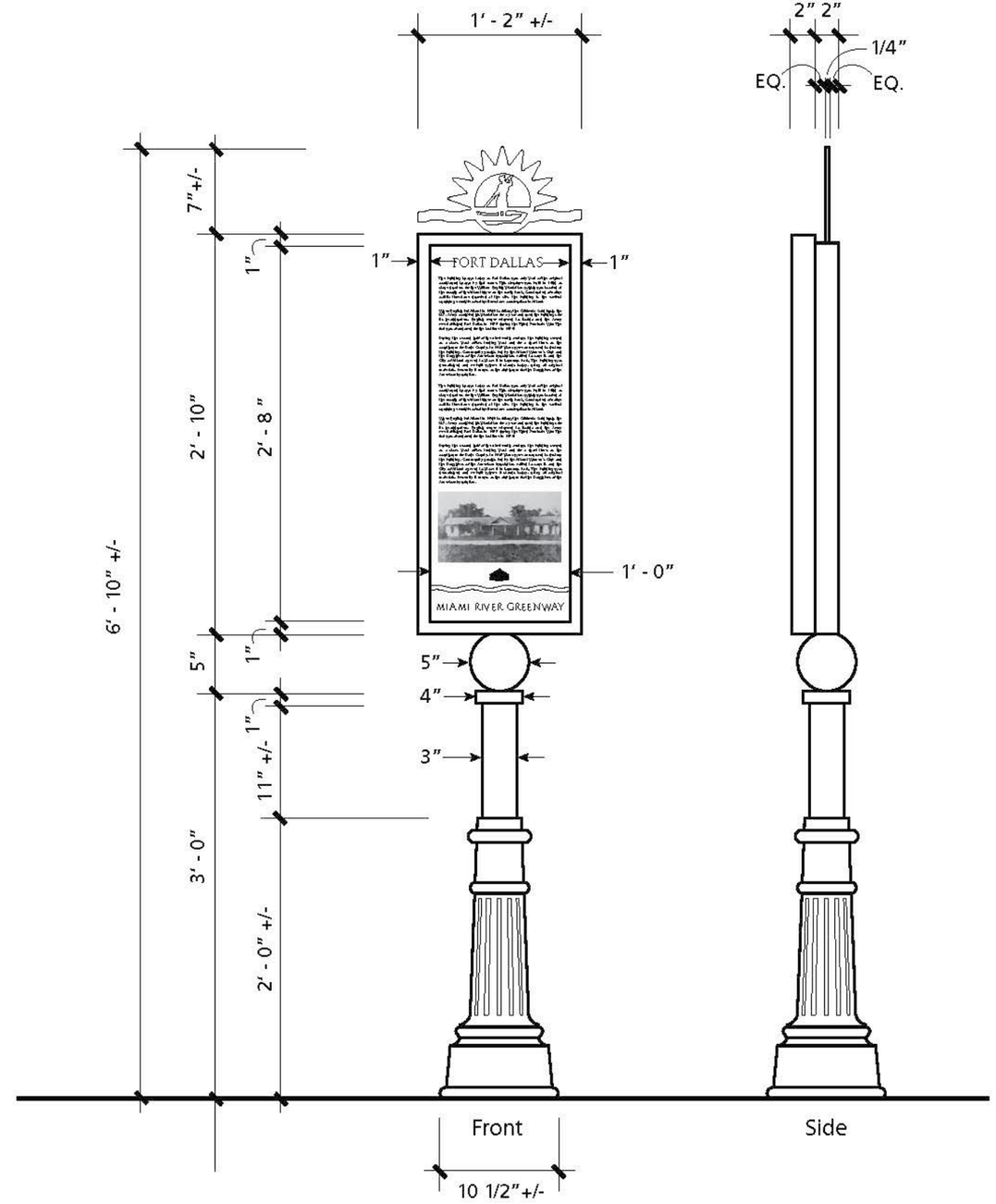

2 W-HIS — Historical Marker Sign - Overall Dimensions
Scale: 1" = 1'-0"

Sign Type: **W-HIS**

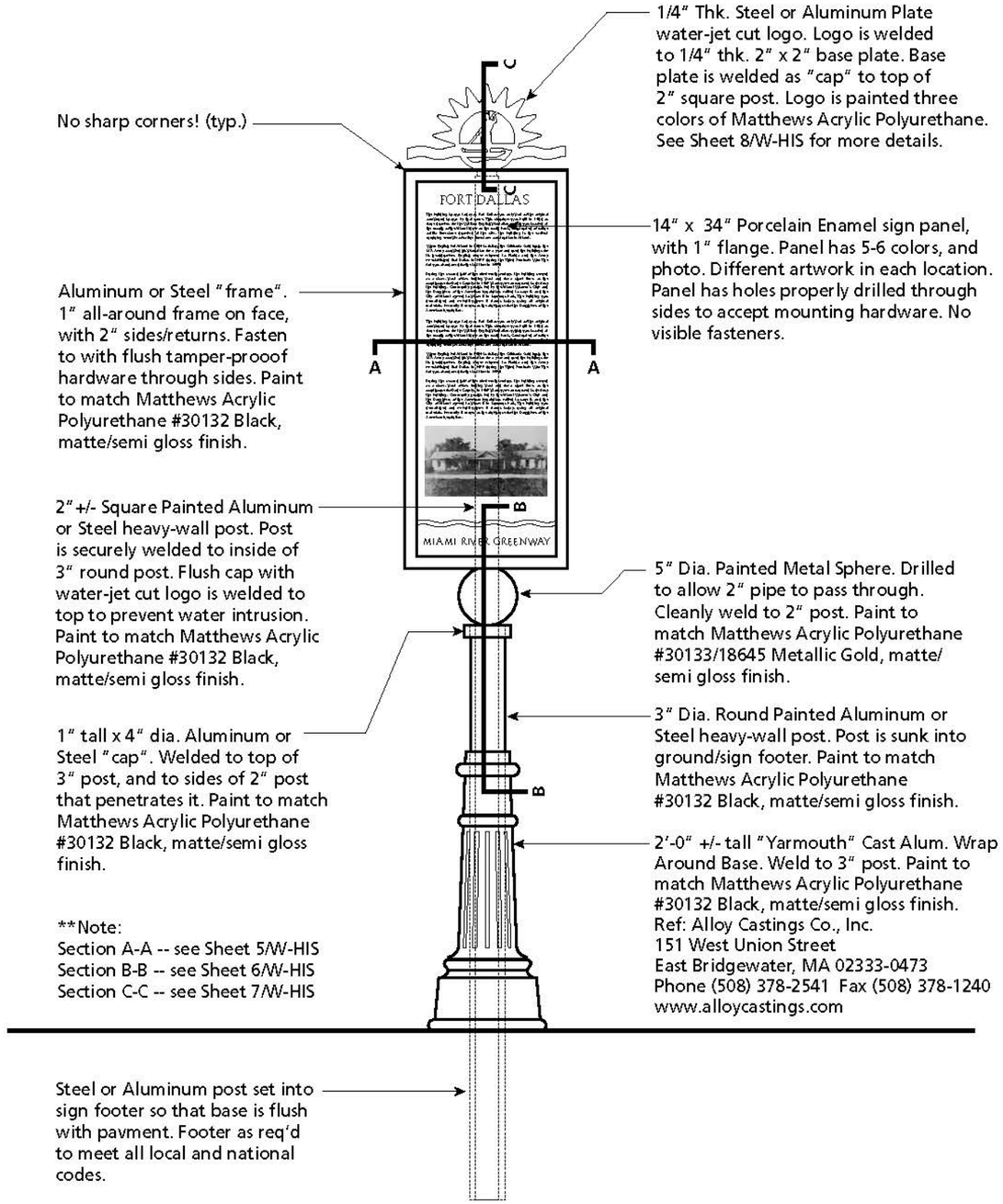

No sharp corners! (typ.)

1/4" Thk. Steel or Aluminum Plate water-jet cut logo. Logo is welded to 1/4" thk. 2" x 2" base plate. Base plate is welded as "cap" to top of 2" square post. Logo is painted three colors of Matthews Acrylic Polyurethane. See Sheet 8/W-HIS for more details.

14" x 34" Porcelain Enamel sign panel, with 1" flange. Panel has 5-6 colors, and photo. Different artwork in each location. Panel has holes properly drilled through sides to accept mounting hardware. No visible fasteners.

Aluminum or Steel "frame". 1" all-around frame on face, with 2" sides/returns. Fasten to with flush tamper-prooof hardware through sides. Paint to match Matthews Acrylic Polyurethane #30132 Black, matte/semi gloss finish.

2"+/- Square Painted Aluminum or Steel heavy-wall post. Post is securely welded to inside of 3" round post. Flush cap with water-jet cut logo is welded to top to prevent water intrusion. Paint to match Matthews Acrylic Polyurethane #30132 Black, matte/semi gloss finish.

5" Dia. Painted Metal Sphere. Drilled to allow 2" pipe to pass through. Cleanly weld to 2" post. Paint to match Matthews Acrylic Polyurethane #30133/18645 Metallic Gold, matte/ semi gloss finish.

1" tall x 4" dia. Aluminum or Steel "cap". Welded to top of 3" post, and to sides of 2" post that penetrates it. Paint to match Matthews Acrylic Polyurethane #30132 Black, matte/semi gloss finish.

3" Dia. Round Painted Aluminum or Steel heavy-wall post. Post is sunk into ground/sign footer. Paint to match Matthews Acrylic Polyurethane #30132 Black, matte/semi gloss finish.

2'-0" +/- tall "Yarmouth" Cast Alum. Wrap Around Base. Weld to 3" post. Paint to match Matthews Acrylic Polyurethane #30132 Black, matte/semi gloss finish.
Ref: Alloy Castings Co., Inc.
151 West Union Street
East Bridgewater, MA 02333-0473
Phone (508) 378-2541 Fax (508) 378-1240
www.alloycastings.com

**Note:
Section A-A -- see Sheet 5/W-HIS
Section B-B -- see Sheet 6/W-HIS
Section C-C -- see Sheet 7/W-HIS

Steel or Aluminum post set into sign footer so that base is flush with pavment. Footer as req'd to meet all local and national codes.

3 / W-HIS Historical Marker Sign - Materials & Colors
Scale: 1" = 1'-0"

Sign Type: **W-HIS**

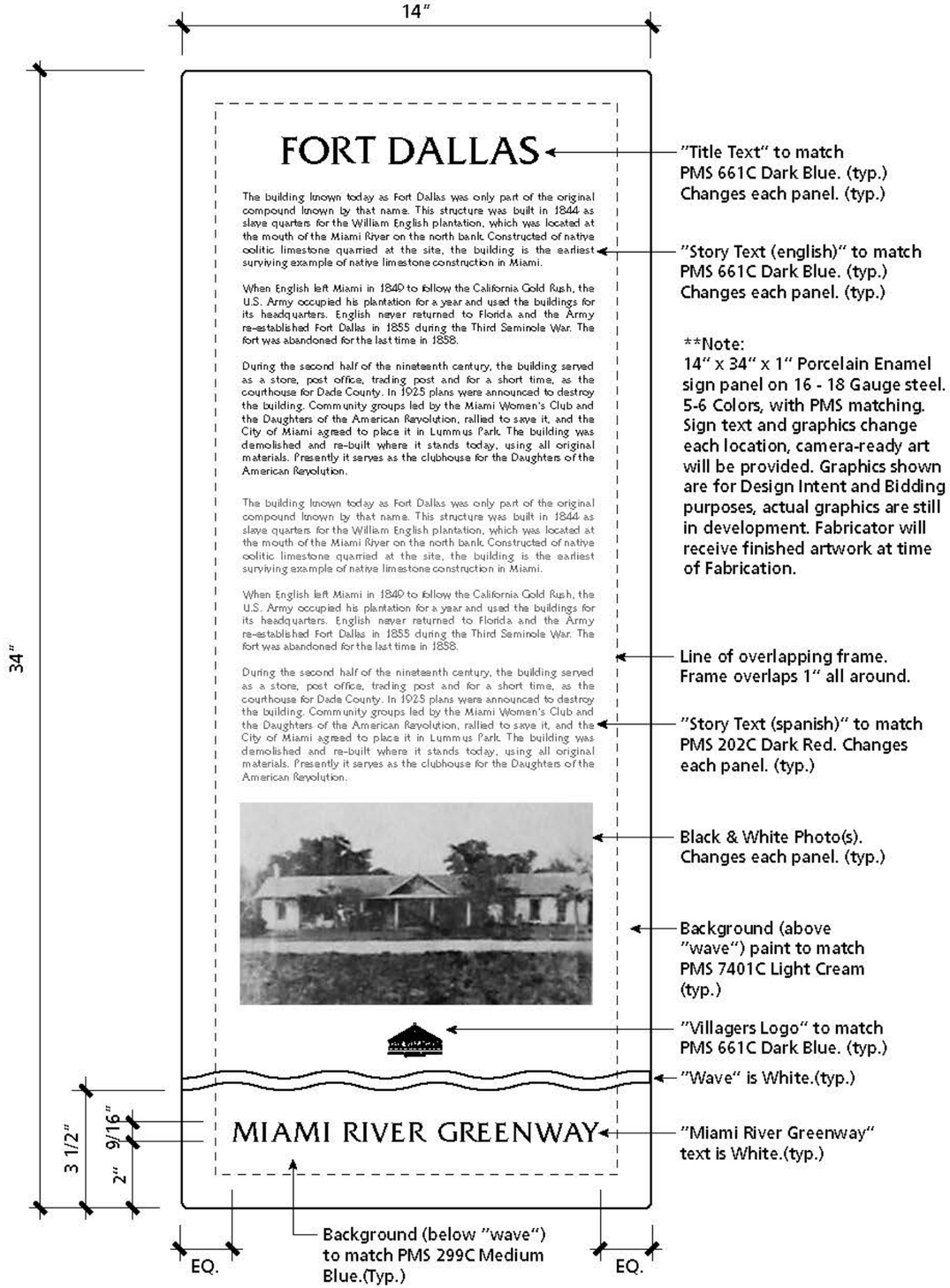

"Title Text" to match PMS 661C Dark Blue. (typ.) Changes each panel. (typ.)

"Story Text (english)" to match PMS 661C Dark Blue. (typ.) Changes each panel. (typ.)

**Note:
14" x 34" x 1" Porcelain Enamel sign panel on 16 - 18 Gauge steel. 5-6 Colors, with PMS matching. Sign text and graphics change each location, camera-ready art will be provided. Graphics shown are for Design Intent and Bidding purposes, actual graphics are still in development. Fabricator will receive finished artwork at time of Fabrication.

Line of overlapping frame. Frame overlaps 1" all around.

"Story Text (spanish)" to match PMS 202C Dark Red. Changes each panel. (typ.)

Black & White Photo(s). Changes each panel. (typ.)

Background (above "wave") paint to match PMS 7401C Light Cream (typ.)

"Villagers Logo" to match PMS 661C Dark Blue. (typ.)

"Wave" is White.(typ.)

"Miami River Greenway" text is White.(typ.)

Background (below "wave") to match PMS 299C Medium Blue.(Typ.)

4 / W-HIS Historical Marker Sign - Typical Sign Panel Dimensions
Scale: 3" = 1'-0"

Sign Type: **W-HIS**

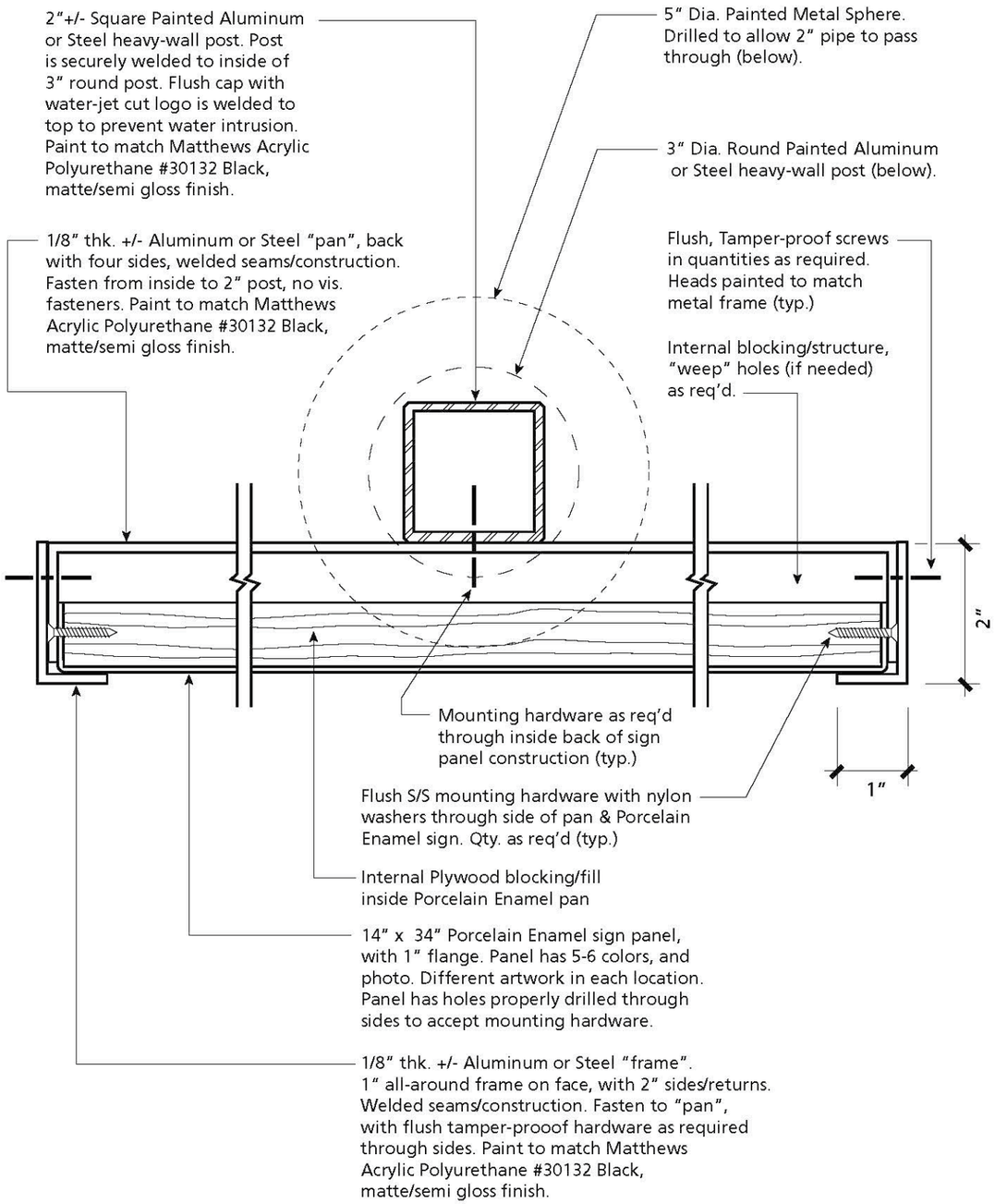

5 W-HIS Historical Marker Sign - Horizontal Section A-A
Scale: Half Actual Size

Sign Type: **W-HIS**

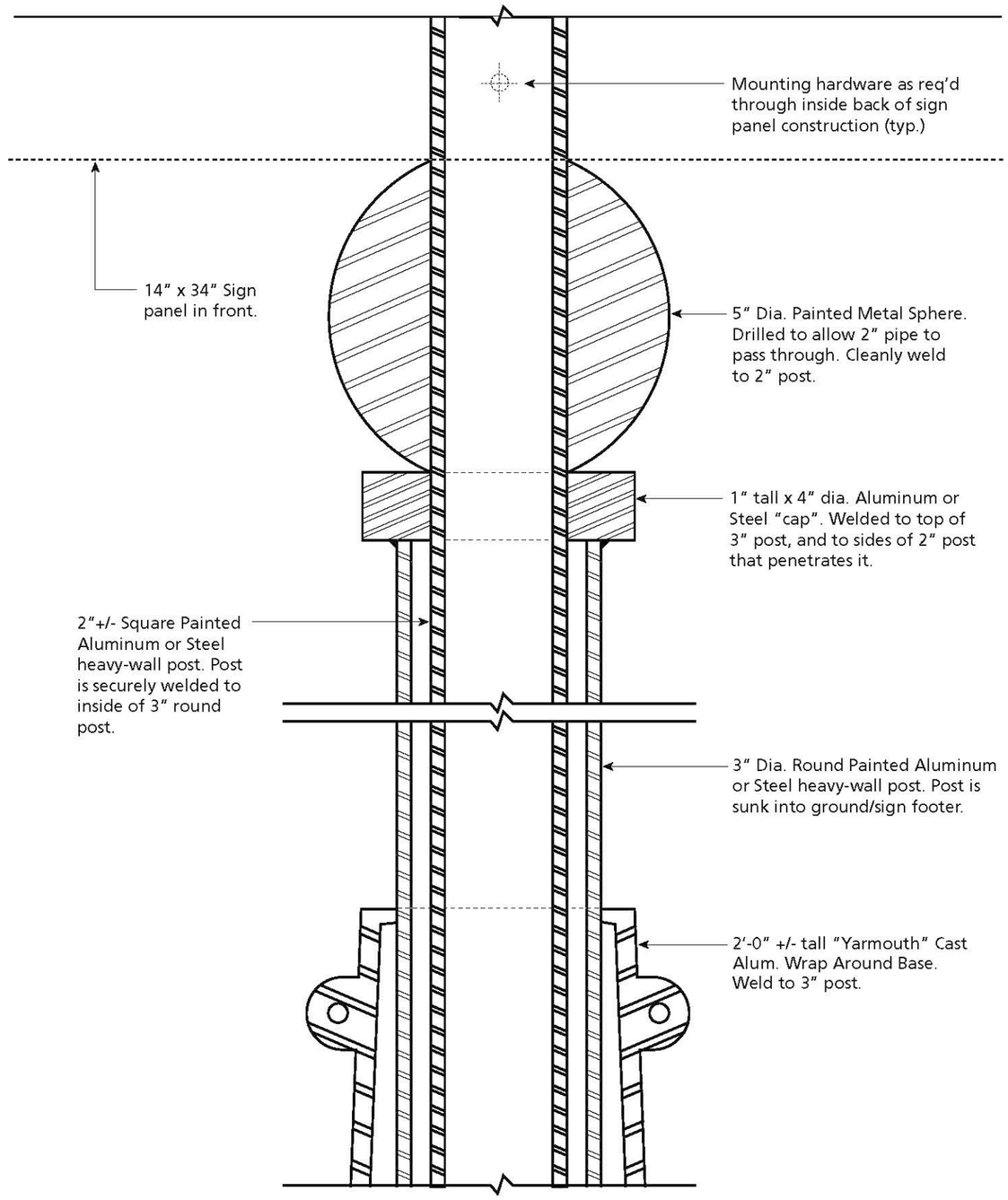

6 W-HIS Historical Marker Sign - Partial Vertical Section B-B
Scale: Half Actual Size

Sign Type: **W-HIS**

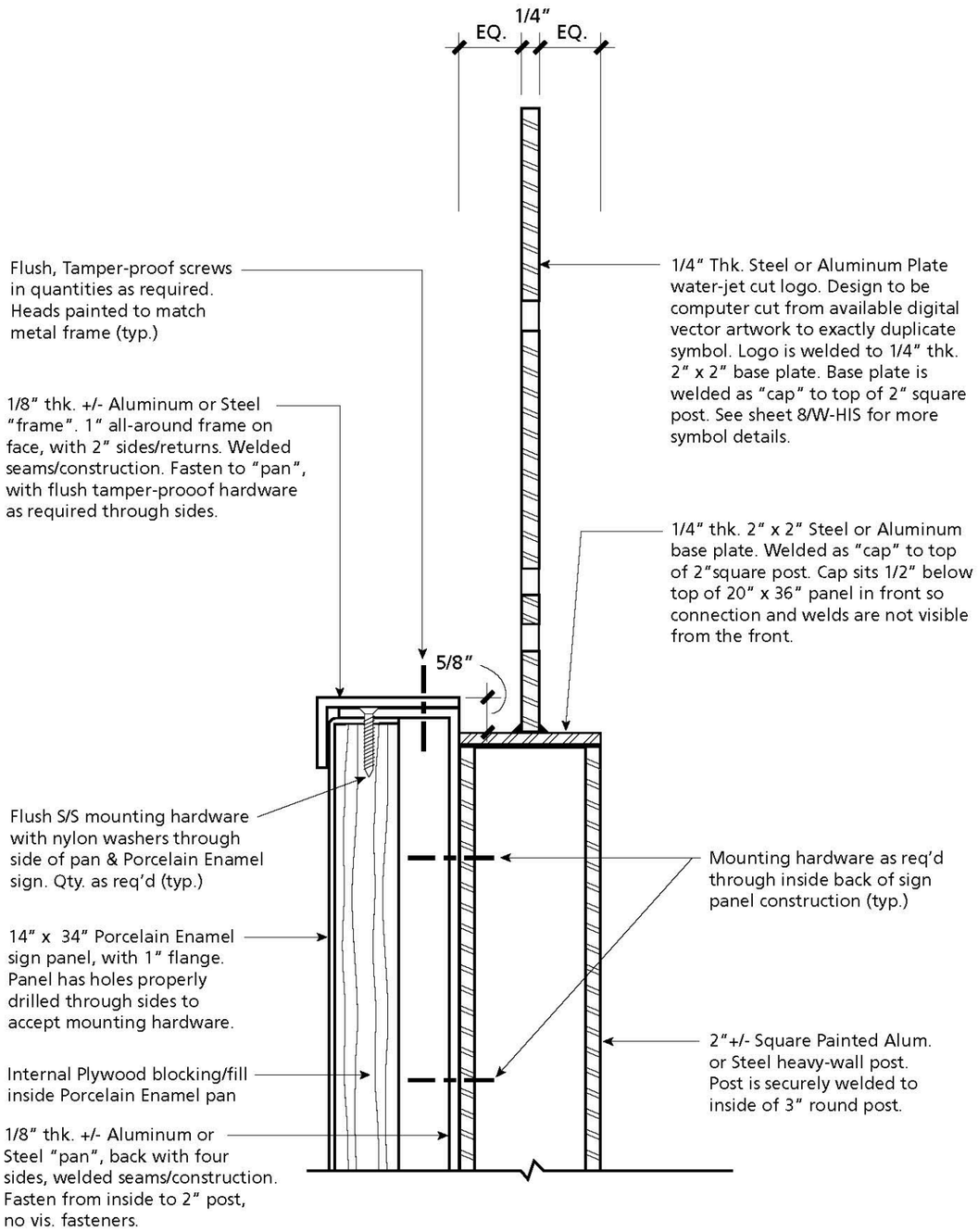

7 W-HIS — Historical Marker Sign - Partial Vertical Section C-C
Scale: Half Actual Size

Sign Type: **W-HIS**

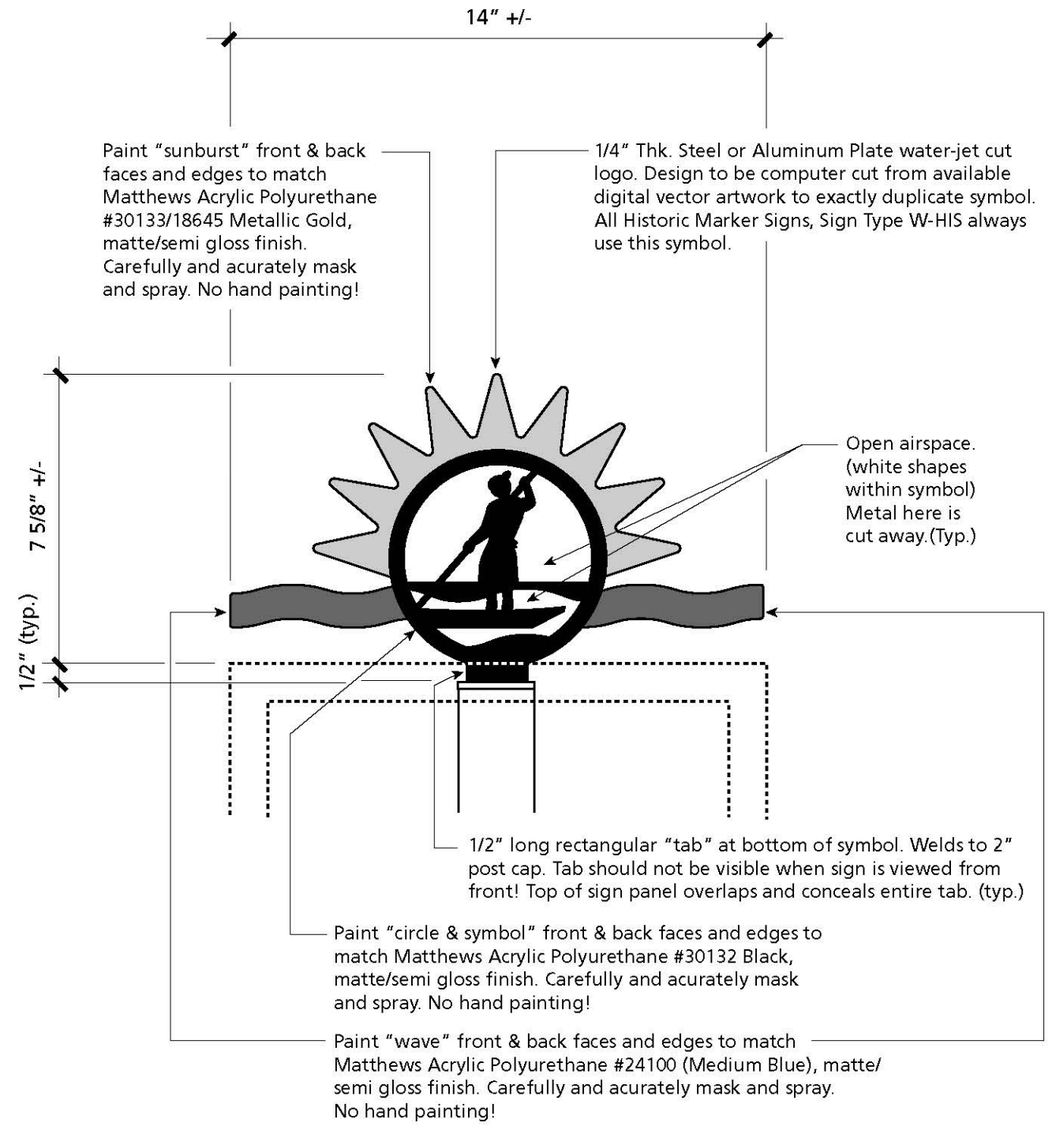

**Note:
Symbol is water-jet cut out of (1) piece of metal plate. Color breaks are achieved by carefully masking and spraying "waves" and "sunburst". Router/laser cut masking from digital files should be used for precision. (1) sample must be supplied and approved for quality of metalwork and paint finish prior to full production.

Symbol pictured was in final development at time of spec. document. Please obtain final versions from City prior to manufacture.

8 W-HIS — Historical Marker Sign - Symbol Specifications
Scale: 3" = 1'-0"

Sign Type: **W-HIS**

**Note:
"Scottish Rite Temple" Porcelain Enamel historical marker. Camera-ready art with actual text and photo will be supplied to Sign Fabricator. Art shown is for design intent and specification purposes only.

Sign Message W-HIS-01

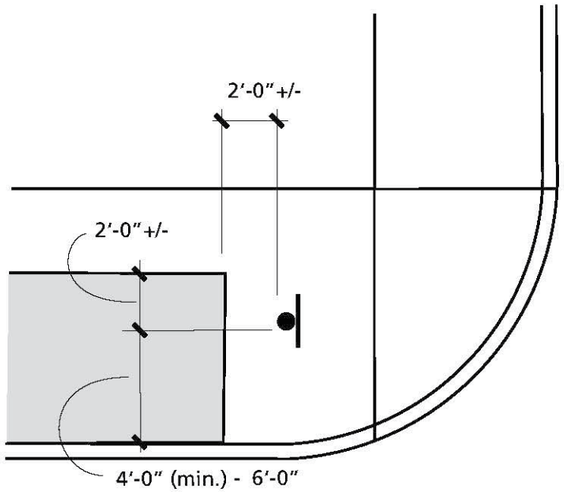

Sign Location W-HIS-01

**Note:
See "Signing and Marking" plans for site sign locations. Diagram here is for install dimensions and orientation.

Details of this sign type are included 'for information only'. All historical marker signs will be fabricated and installed by others in locations shown. G.C. to coordinate with historical sign sub-contractor, all site conditions/work, sign footers and sign installations.

Specific locations are shown for signs located within the scope of the new Greenway construction. City will provide locations for Historical signs that do not fall within the areas of new construction.

**Note:
"Miami River Inn" Porcelain Enamel historical marker. Camera-ready art with actual text and photo will be supplied to Sign Fabricator. Art shown is for design intent and specification purposes only.

Sign Message W-HIS-03

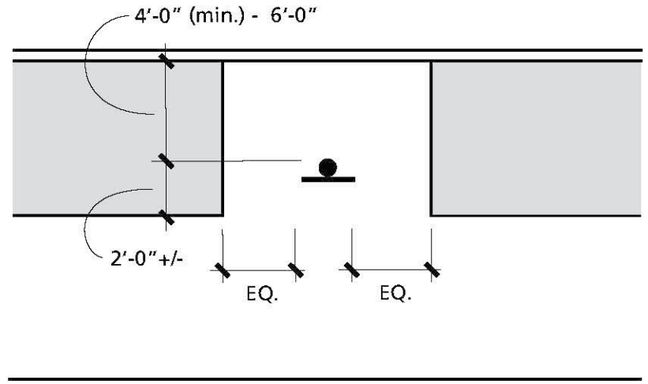

Sign Location W-HIS-03

**Note:
See "Signing and Marking" plans for site sign locations. Diagram here is for install dimensions and orientation.

Details of this sign type are included 'for information only'. All historical marker signs will be fabricated and installed by others in locations shown. G.C. to coordinate with historical sign sub-contractor, all site conditions/work, sign footers and sign installations.

Specific locations are shown for signs located within the scope of the new Greenway construction. City will provide locations for Historical signs that do not fall within the areas of new construction.

Cast Bronze sign w/paintfilled recess. Set flush into sidewalk.

1 W-MIM Pedestrian Mile Marker - Overview
Scale: 3″= 1′-0″

Sign Type: **W-MIM**

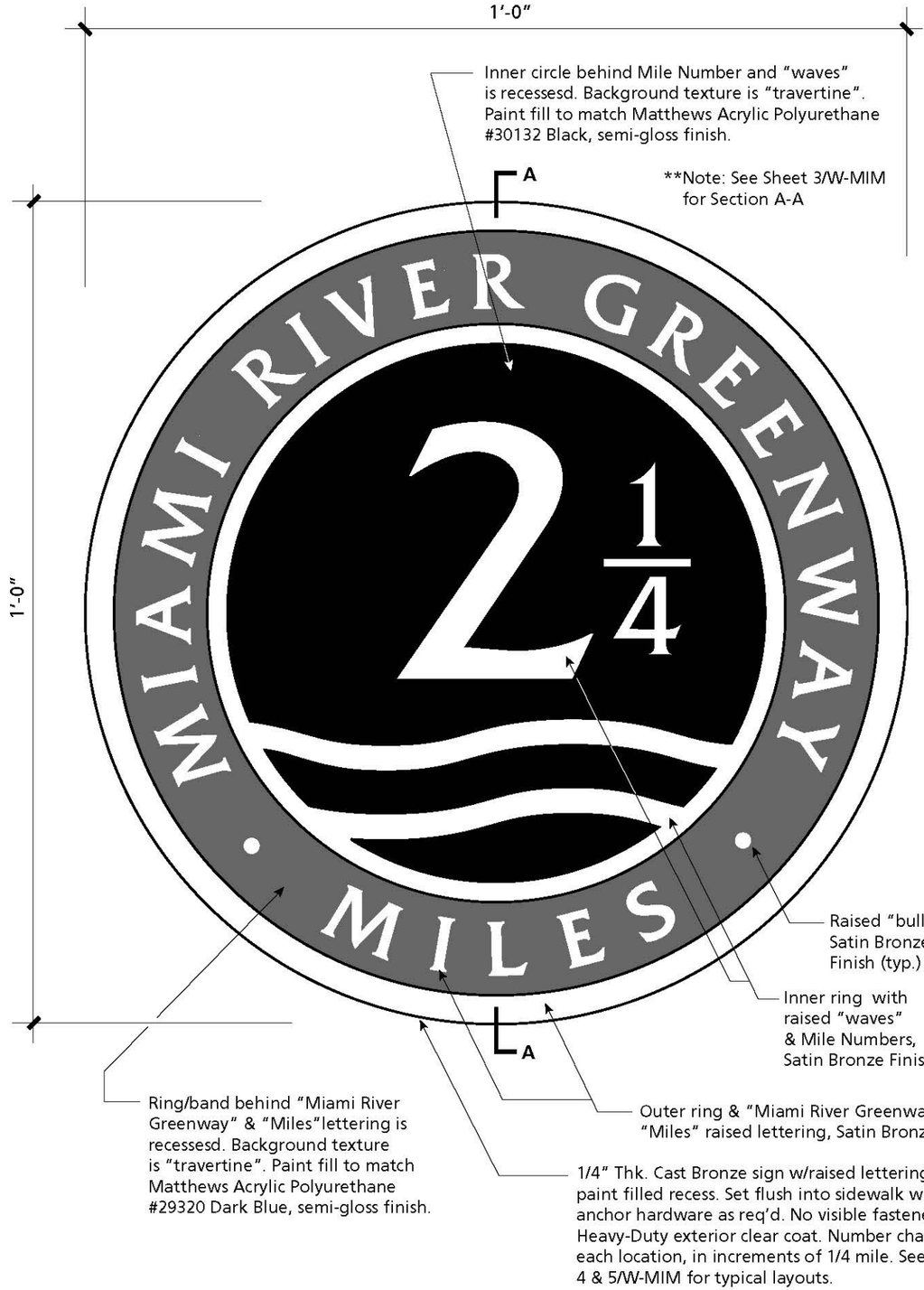

Inner circle behind Mile Number and "waves" is recessesd. Background texture is "travertine". Paint fill to match Matthews Acrylic Polyurethane #30132 Black, semi-gloss finish.

**Note: See Sheet 3/W-MIM for Section A-A

Raised "bullit", Satin Bronze Finish (typ.)

Inner ring with raised "waves" & Mile Numbers, Satin Bronze Finish

Outer ring & "Miami River Greenway" & "Miles" raised lettering, Satin Bronze Finish

Ring/band behind "Miami River Greenway" & "Miles"lettering is recessesd. Background texture is "travertine". Paint fill to match Matthews Acrylic Polyurethane #29320 Dark Blue, semi-gloss finish.

1/4" Thk. Cast Bronze sign w/raised lettering & paint filled recess. Set flush into sidewalk with anchor hardware as req'd. No visible fasteners. Heavy-Duty exterior clear coat. Number changes each location, in increments of 1/4 mile. See Sheet 4 & 5/W-MIM for typical layouts.

2 W-MIM Pedestrian Mile Marker - Dimensions, Materials & Colors
Scale: Half Actual Size

Sign Type: **W-MIM**

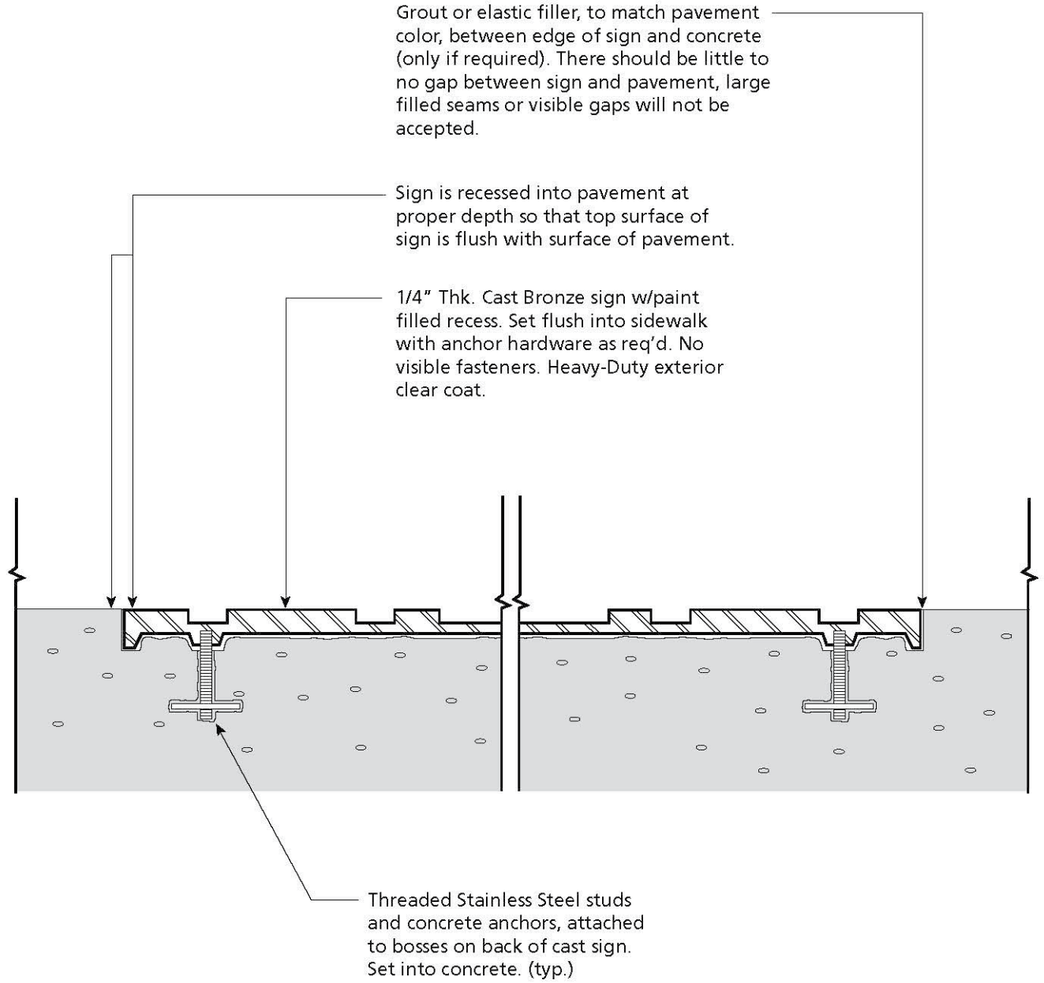

3 W-MIM Pedestrian Mile Marker - Horizontal Section A-A
Scale: Actual Size

Sign Type: **W-MIM**

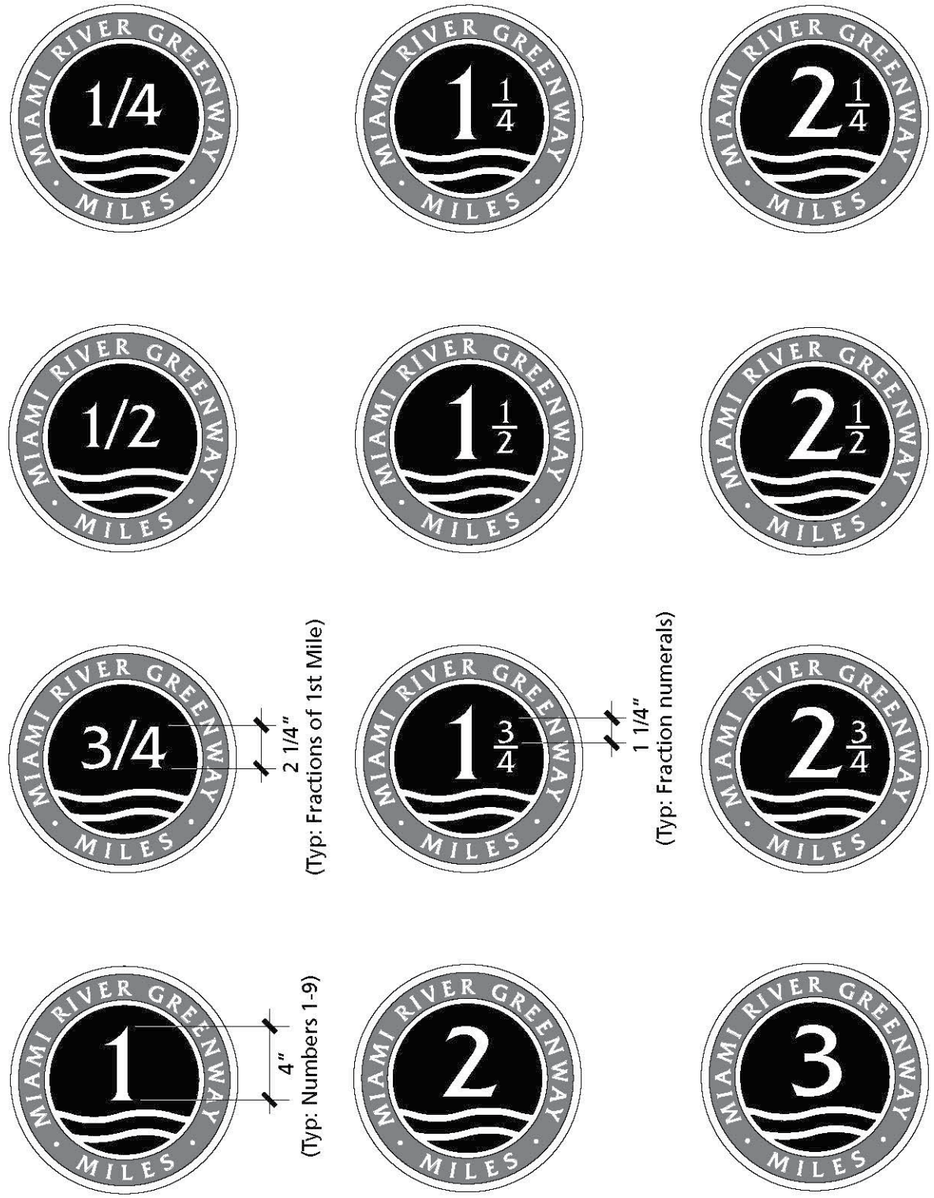

** Note:
Layouts above show typical number layout for fractions of first mile; single-digit miles (Miles 4-9 similar to layouts shown above); and single-digit fractions of a mile (in 1/4 mile increments.)
Typeface: "Friz Quadrata"

4 W-MIM Pedestrian Mile Marker - Typical Layouts 1
Scale: 1 1/2" = 1' - 0"

Sign Type: **W-MIM**

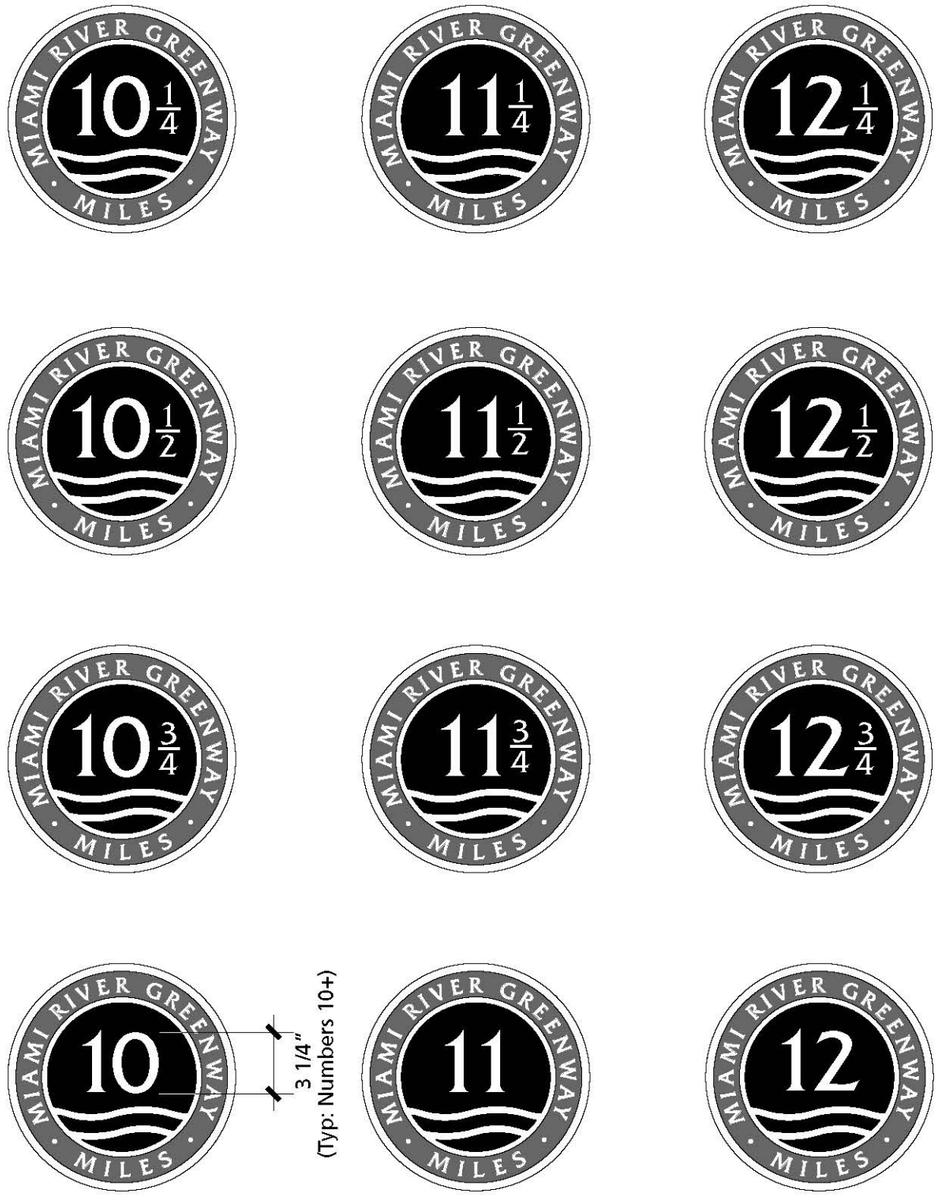

** Note:
Layouts above show typical number layout for double-digit miles (Miles 13+ similar to layouts shown above); and double-digit fractions of a mile (in 1/4 mile increments.)
Typeface: "Friz Quadrata"

5 W-MIM — Pedestrian Mile Marker - Typical Layouts 2
Scale: 1 1/2" = 1' - 0"

Sign Type: **W-MIM**

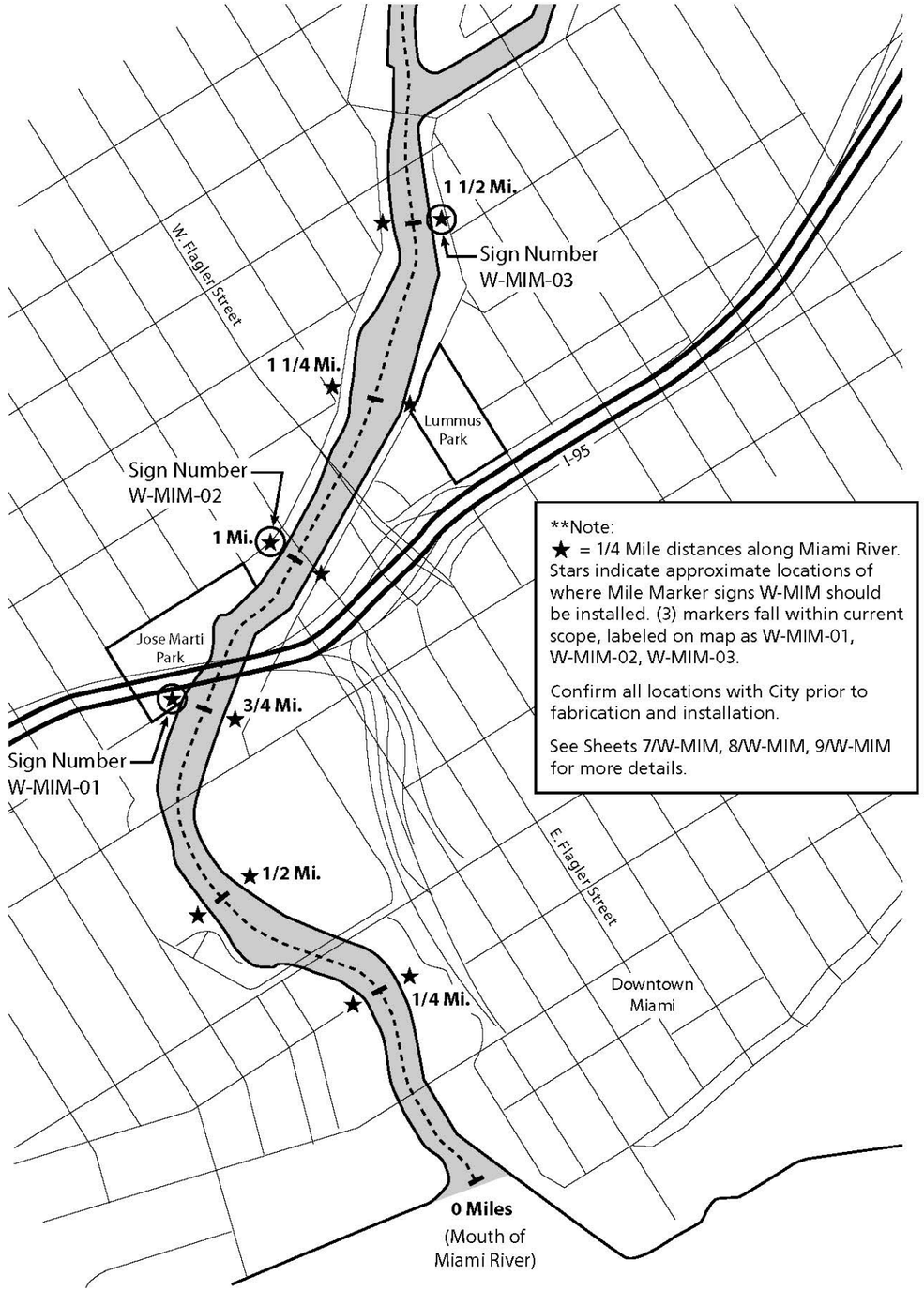

6 W-MIM — Pedestrian Mile Marker - Overall Mile Marker Locations
No Scale

Sign Type: **W-MIM**

**Note:
Fabricator must submit camera-ready layouts of all sign panels to the City of Miami for approval prior to fabrication.

Sign Location W-MIM-01

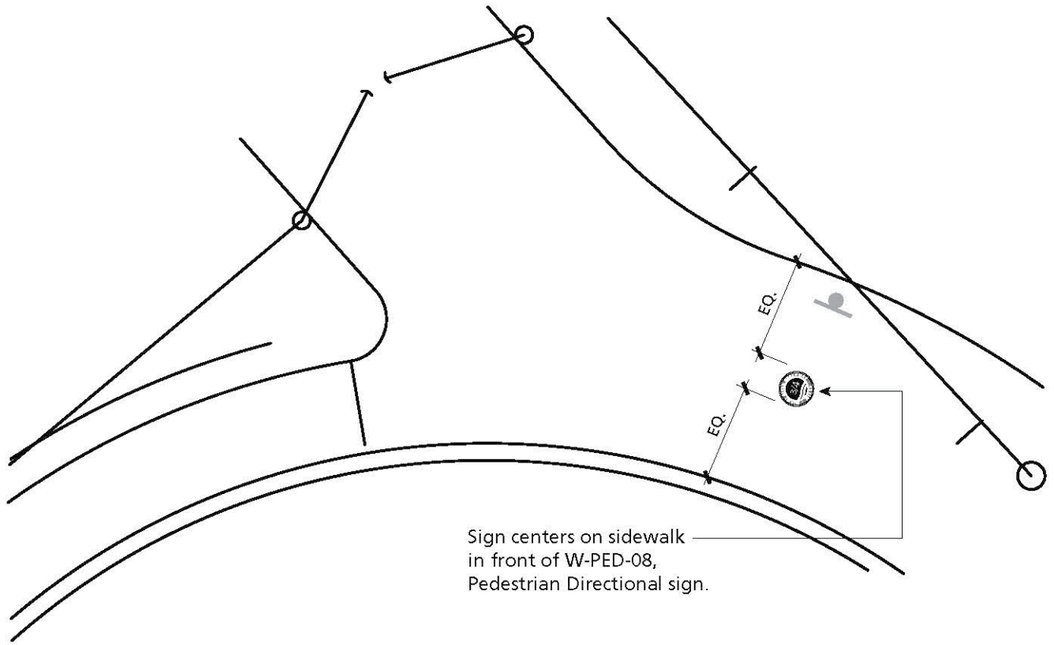

Sign Location W-MIM-01

7
W-MIM

Pedestrian Mile Marker - Sign Messages & Location
Scale: No Scale

Sign Type: **W-MIM**

**Note:
Fabricator must submit camera-ready layouts of all sign panels to the City of Miami for approval prior to fabrication.

Sign Location W-MIM-02

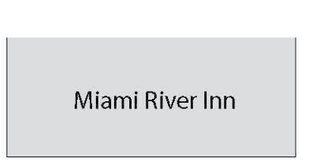

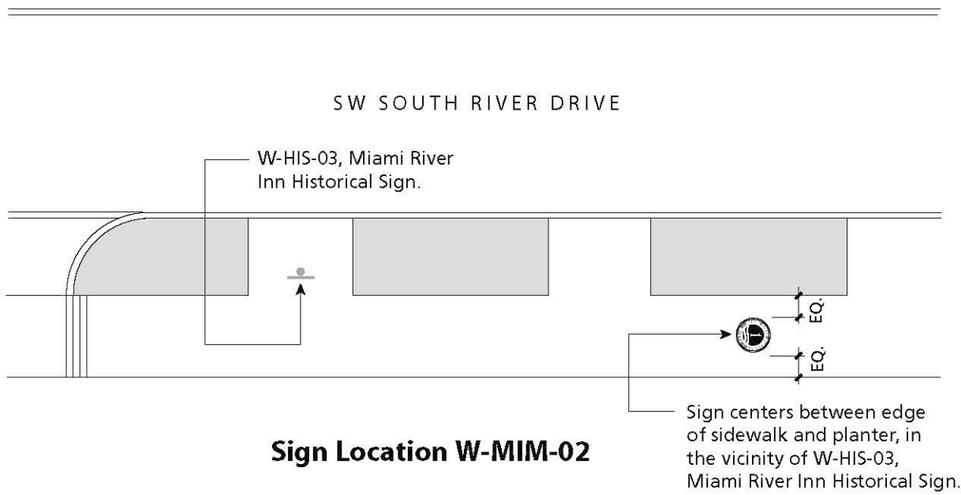

Sign Location W-MIM-02

8
W-MIM

Pedestrian Mile Marker - Sign Messages & Location
Scale: No Scale

Sign Type: **W-MIM**

**Note:
Fabricator must submit camera-ready layouts of all sign panels to the City of Miami for approval prior to fabrication.

Sign Location W-MIM-03

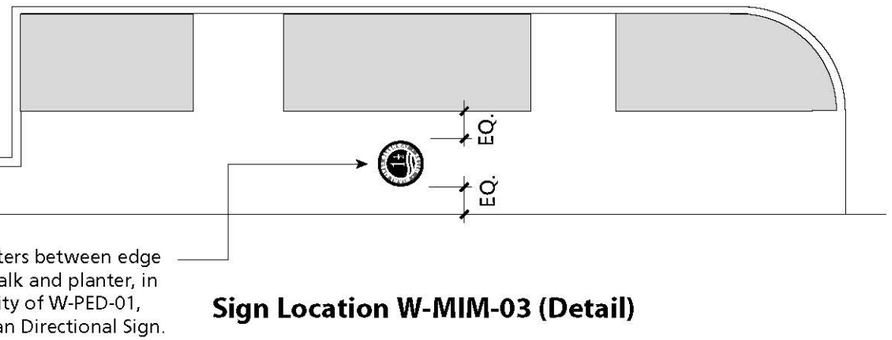

Sign Location W-MIM-03 (Detail)

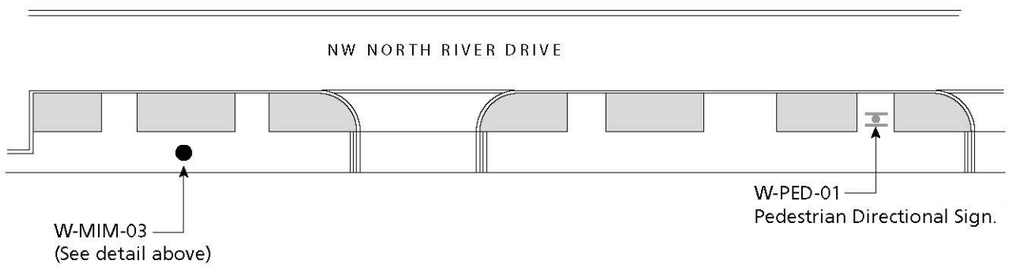

Sign Location W-MIM-03

9
W-MIM

Pedestrian Mile Marker - Sign Messages & Location
Scale: No Scale

Sign Type: **W-MIM**

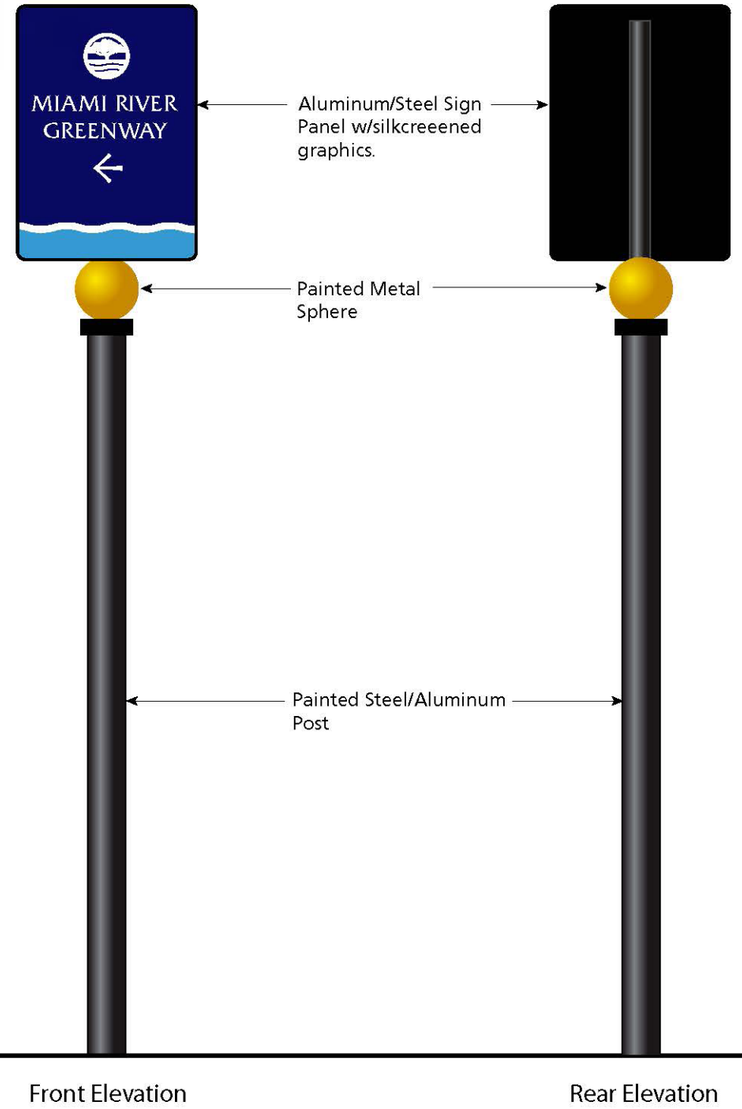

1
W-PRM

Perimeter Pedestrian Directional Sign - Overview
Scale: 1″= 1′-0″

Sign Type: **W-PRM**

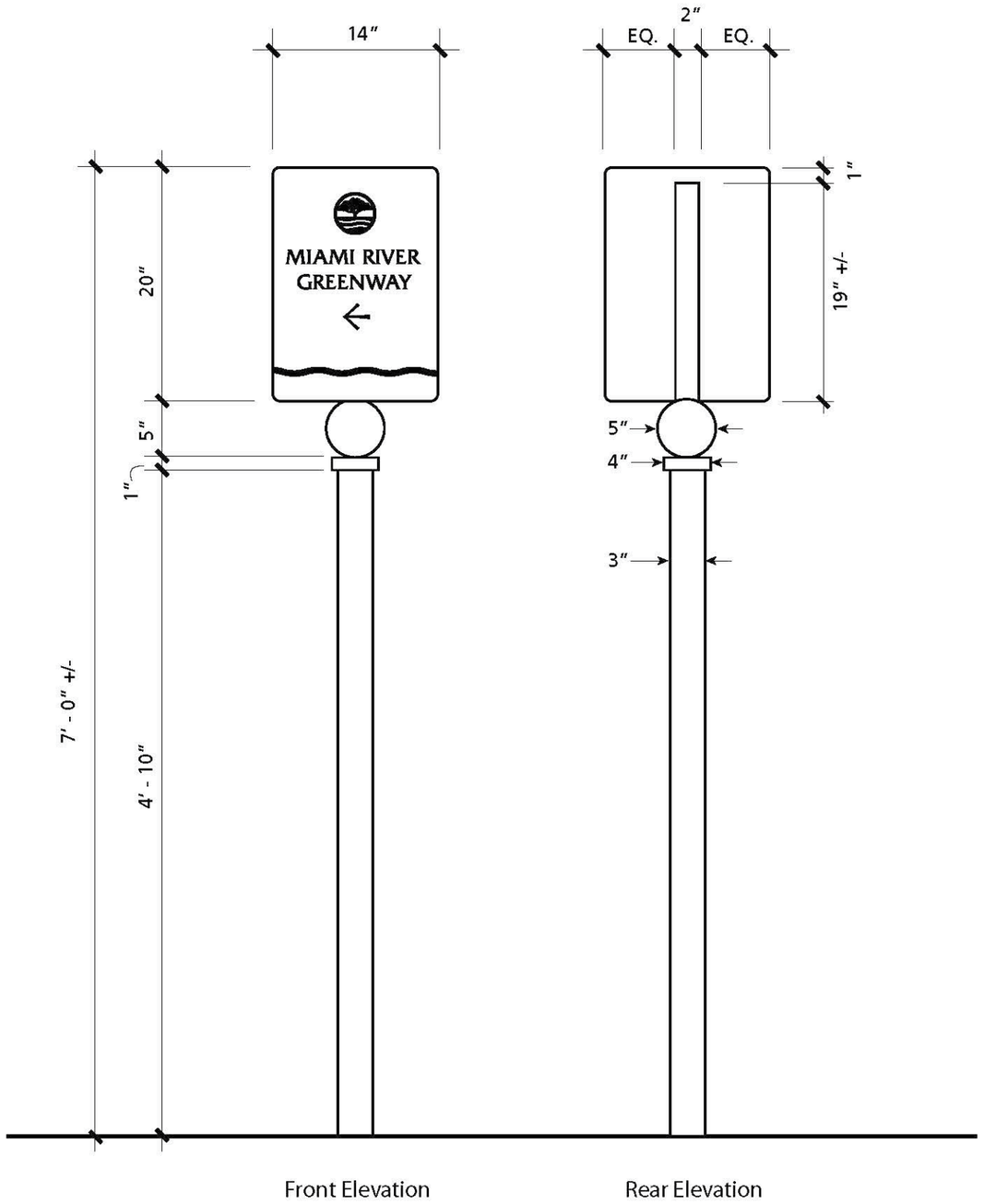

2 W-PRM Perimeter Pedestrian Directional Sign - Overall Dimensions
Scale: 1"= 1'-0"

Sign Type: **W-PRM**

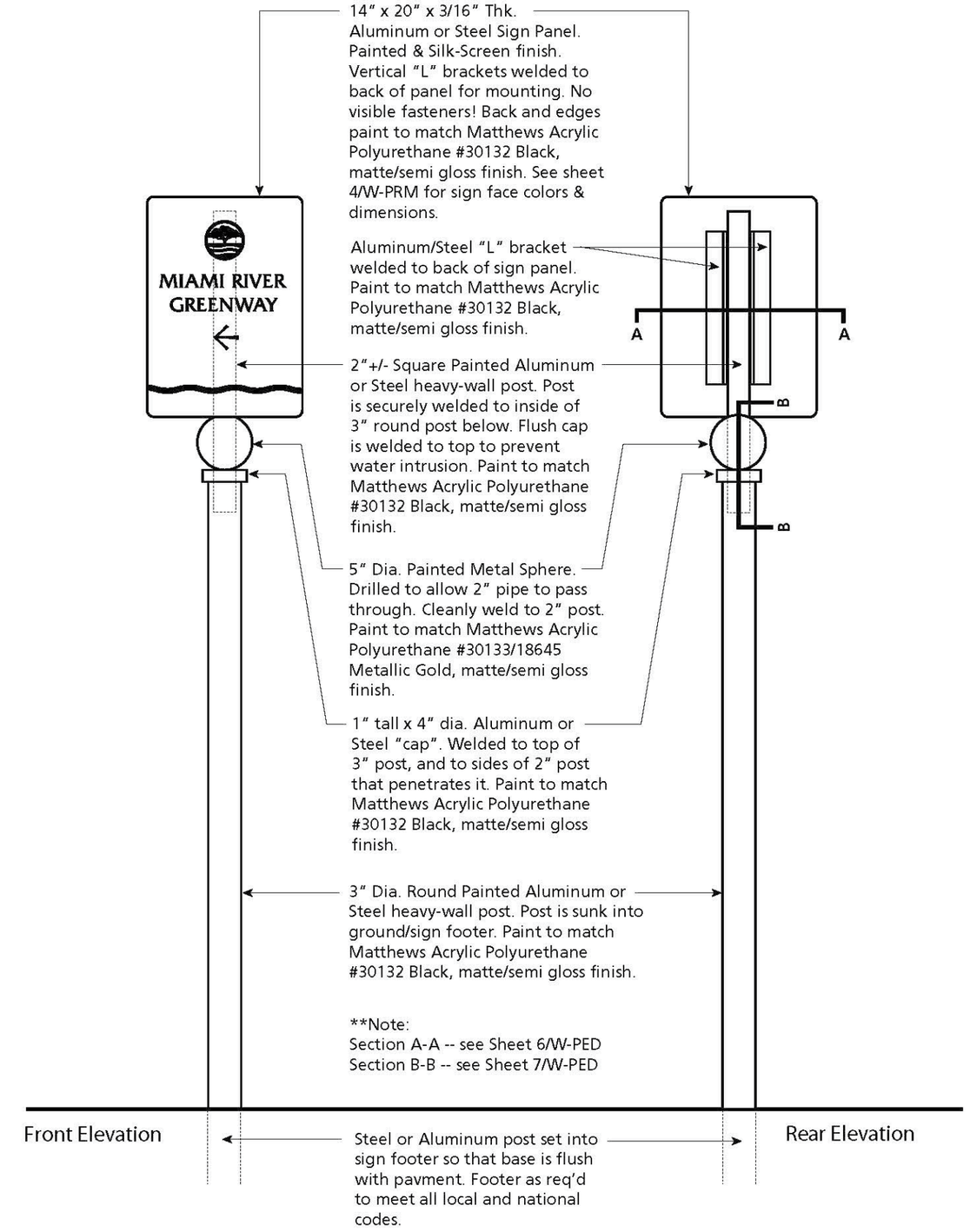

3 W-PRM Perimeter Pedestrian Directional Sign - Materials & Colors
Scale: 1"= 1'-0"

Sign Type: **W-PRM**

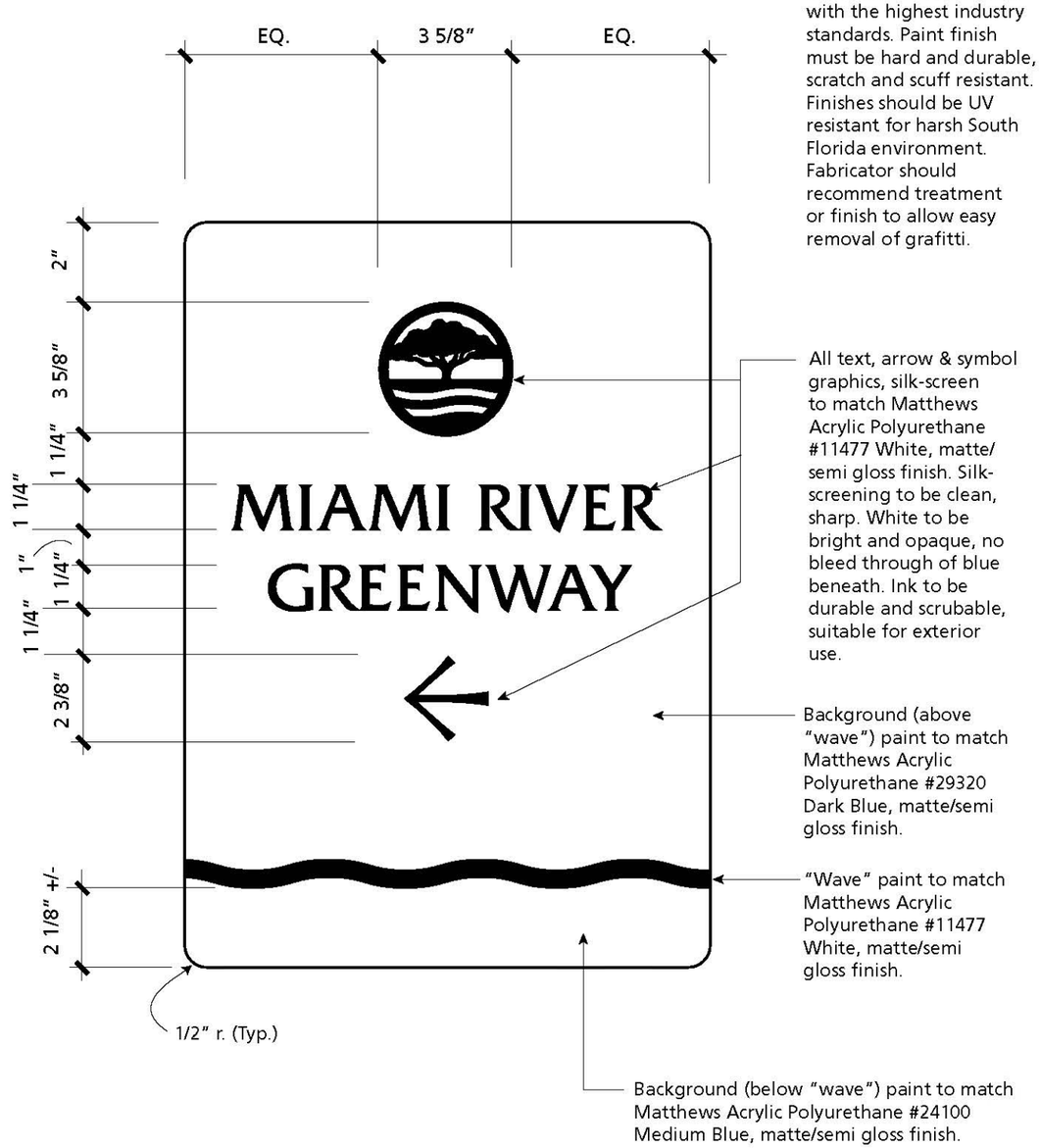

**Note:
All sign finishes must be applied in accordance with the highest industry standards. Paint finish must be hard and durable, scratch and scuff resistant. Finishes should be UV resistant for harsh South Florida environment. Fabricator should recommend treatment or finish to allow easy removal of grafitti.

4 W-PRM Perimeter Pedestrian Directional Sign - Sign Panel Dimensions
Scale: 3" = 1'-0"

Sign Type: **W-PRM**

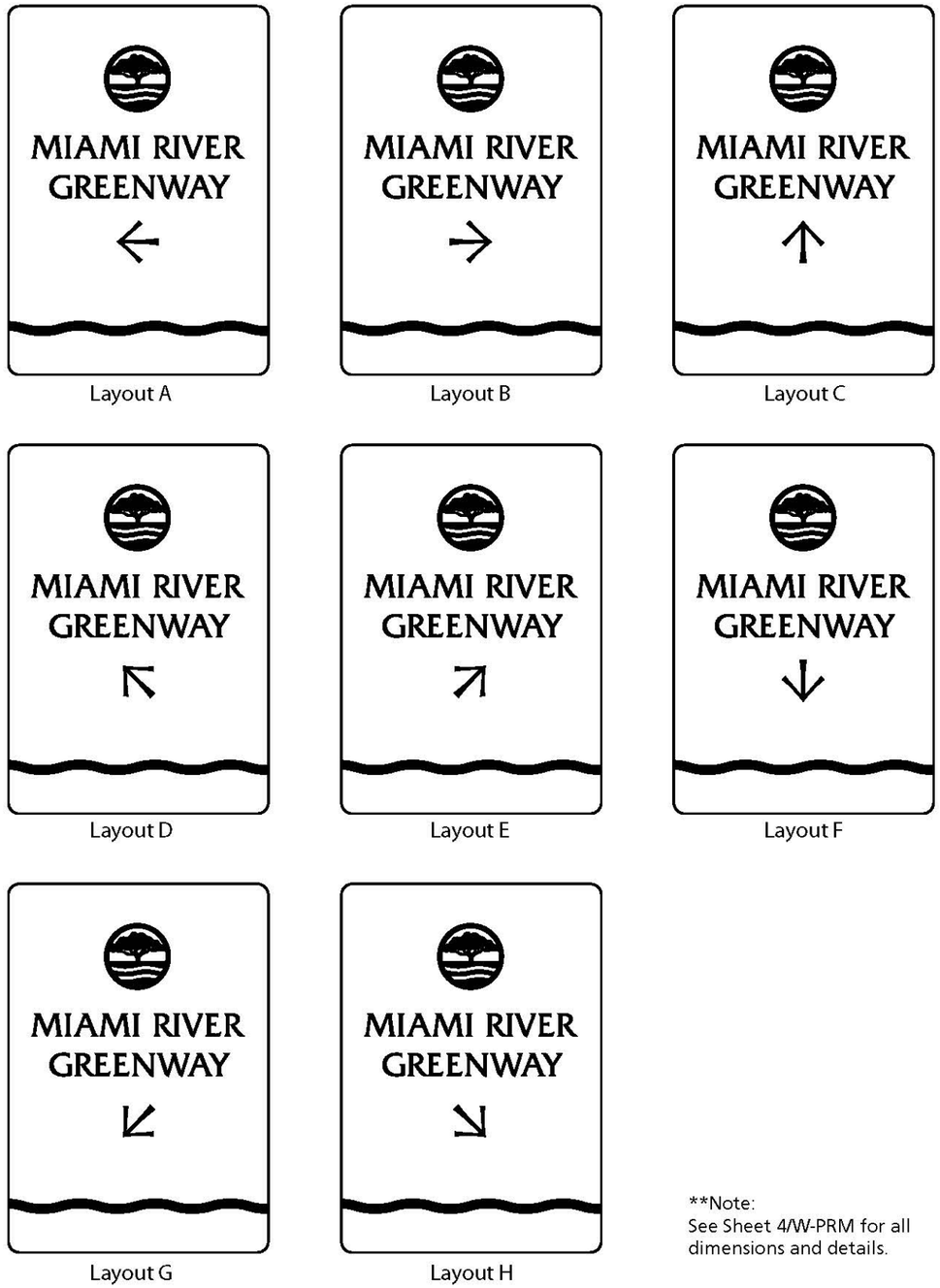

Layout A | Layout B | Layout C

Layout D | Layout E | Layout F

Layout G | Layout H

**Note:
See Sheet 4/W-PRM for all dimensions and details.

5 W-PRM Perimeter Pedestrian Directional Sign - Sign Panel Layouts
Scale: 1 1/2" = 1'-0"

Sign Type: **W-PRM**

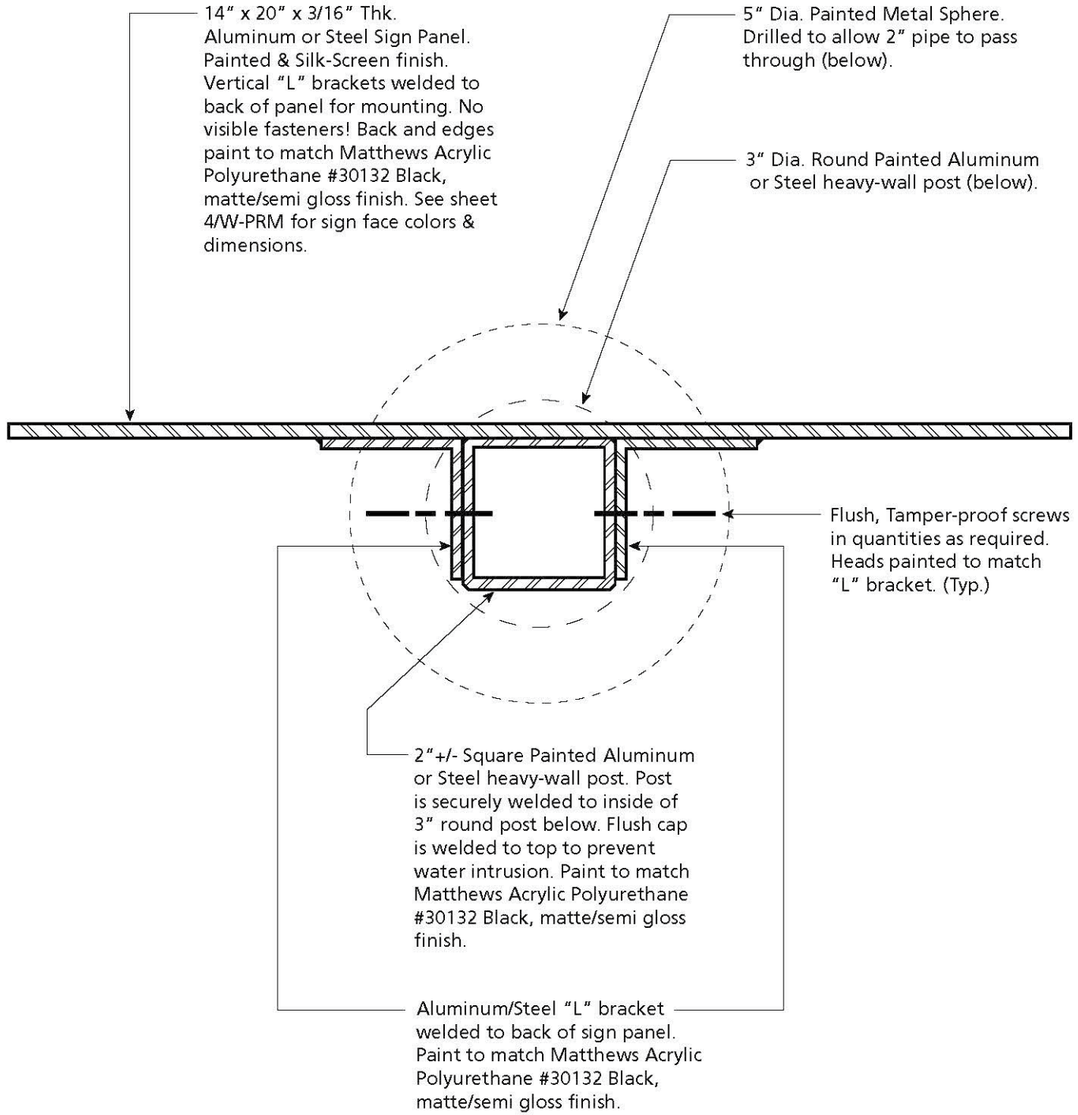

6
W-PRM

Perimeter Pedestrian Directional Sign - Horizontal Section A-A
Scale: Half Actual Size

Sign Type: **W-PRM**

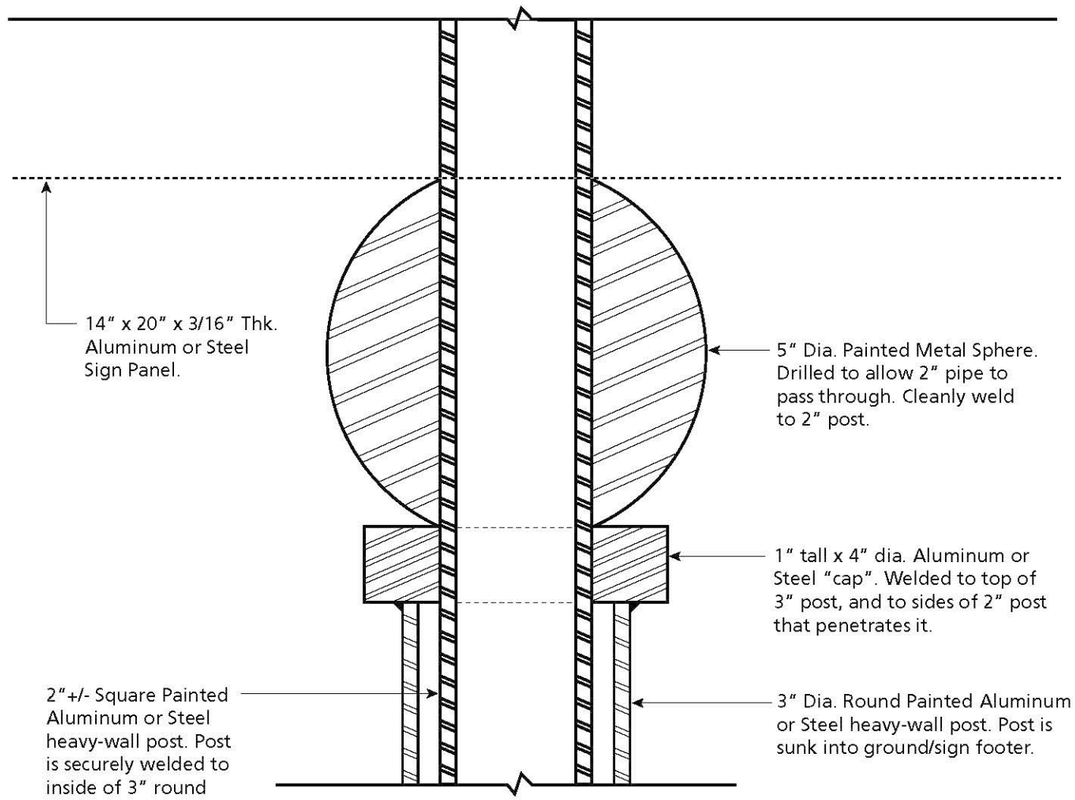

7
W-PRM

Perimeter Pedestrian Directional Sign - Partial Vertical Section B-B
Scale: Half Actual Size

Sign Type: **W-PRM**

Layout C

**Note:
Fabricator must submit camera-ready layouts of all sign panels to the City of Miami for approval prior to fabrication.

Sign Message W-PRM-01

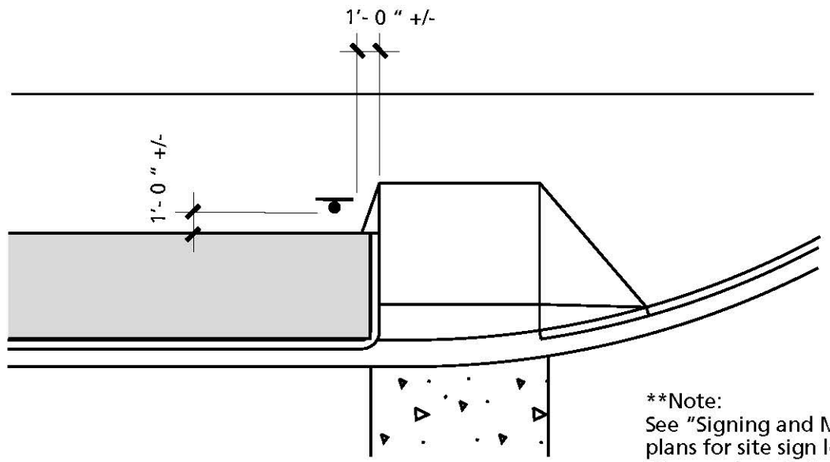

**Note:
See "Signing and Marking" plans for site sign locations. Diagram here is for install dimensions and orientation.

Sign Location W-PRM-01

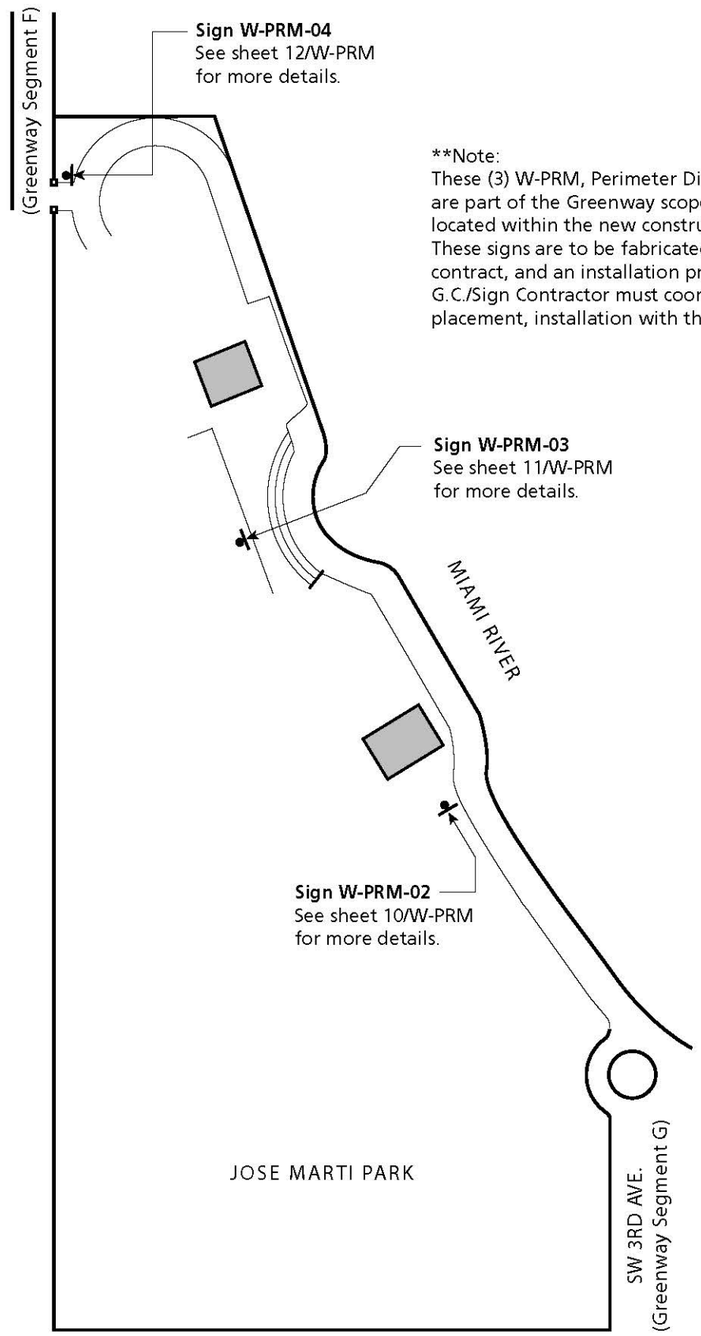

**Note:
These (3) W-PRM, Perimeter Directional signs are part of the Greenway scope, but are not located within the new construction zones. These signs are to be fabricated as part of the contract, and an installation price given. G.C./Sign Contractor must coordinate final placement, installation with the City of Miami.

Sign Locations W-PRM-02, W-PRM-03, W-PRM-04

**Note:
Fabricator must submit camera-ready layouts of all sign panels to the City of Miami for approval prior to fabrication.

Layout E

Sign Message W-PRM-02

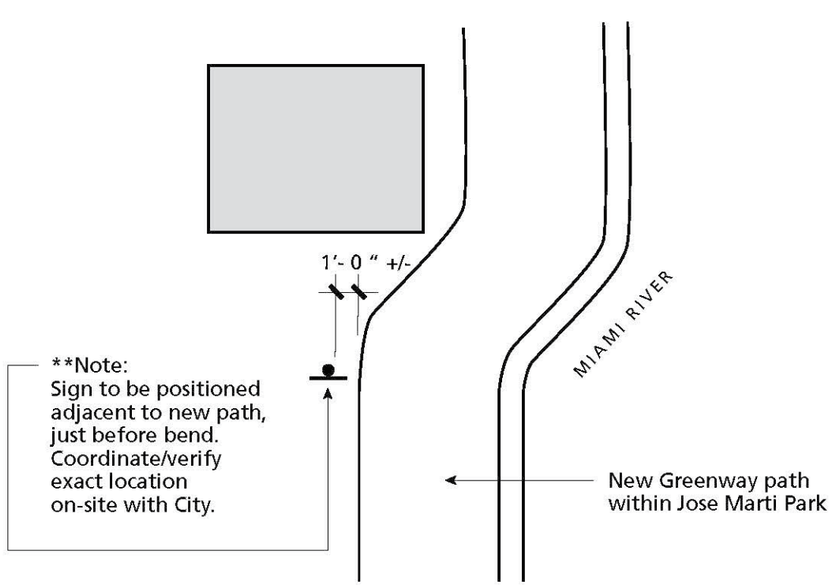

Sign Location W-PRM-02

(Intent only, verify all conditions on-site)

**Note:
Fabricator must submit camera-ready layouts of all sign panels to the City of Miami for approval prior to fabrication.

Layout B

Sign Message W-PRM-03

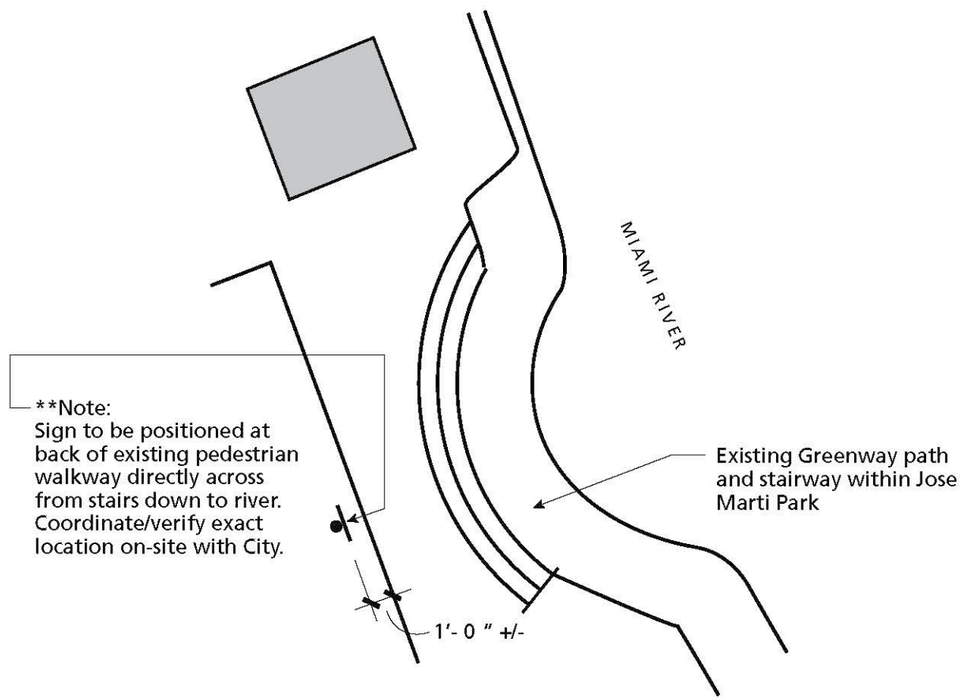

Sign Location W-PRM-03

(Intent only, verify all conditions on-site)

**Note:
Fabricator must submit camera-ready layouts of all sign panels to the City of Miami for approval prior to fabrication.

Layout C

Sign Message W-PRM-04

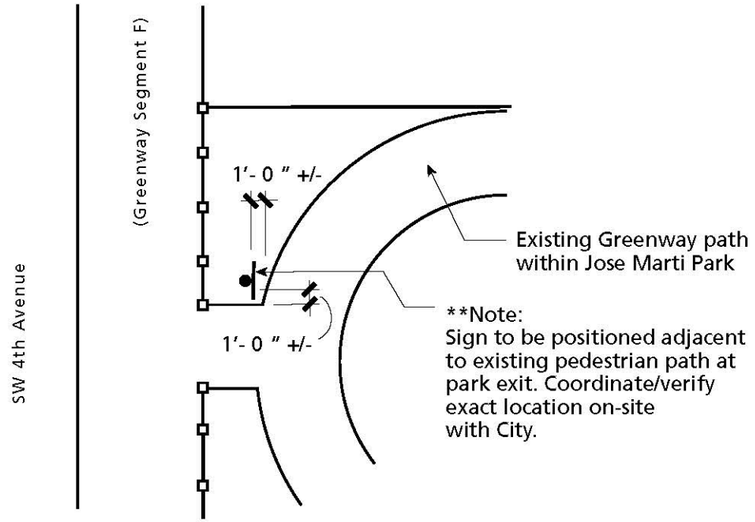

Sign Location W-PRM-04
(Intent only, verify all conditions on-site)

Part Three:

Symbol Application

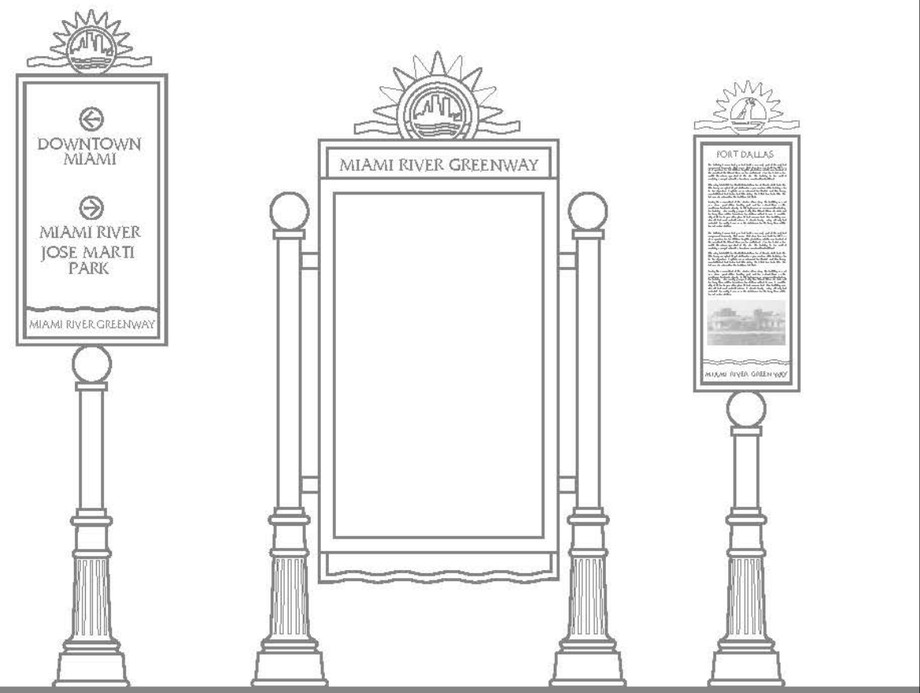

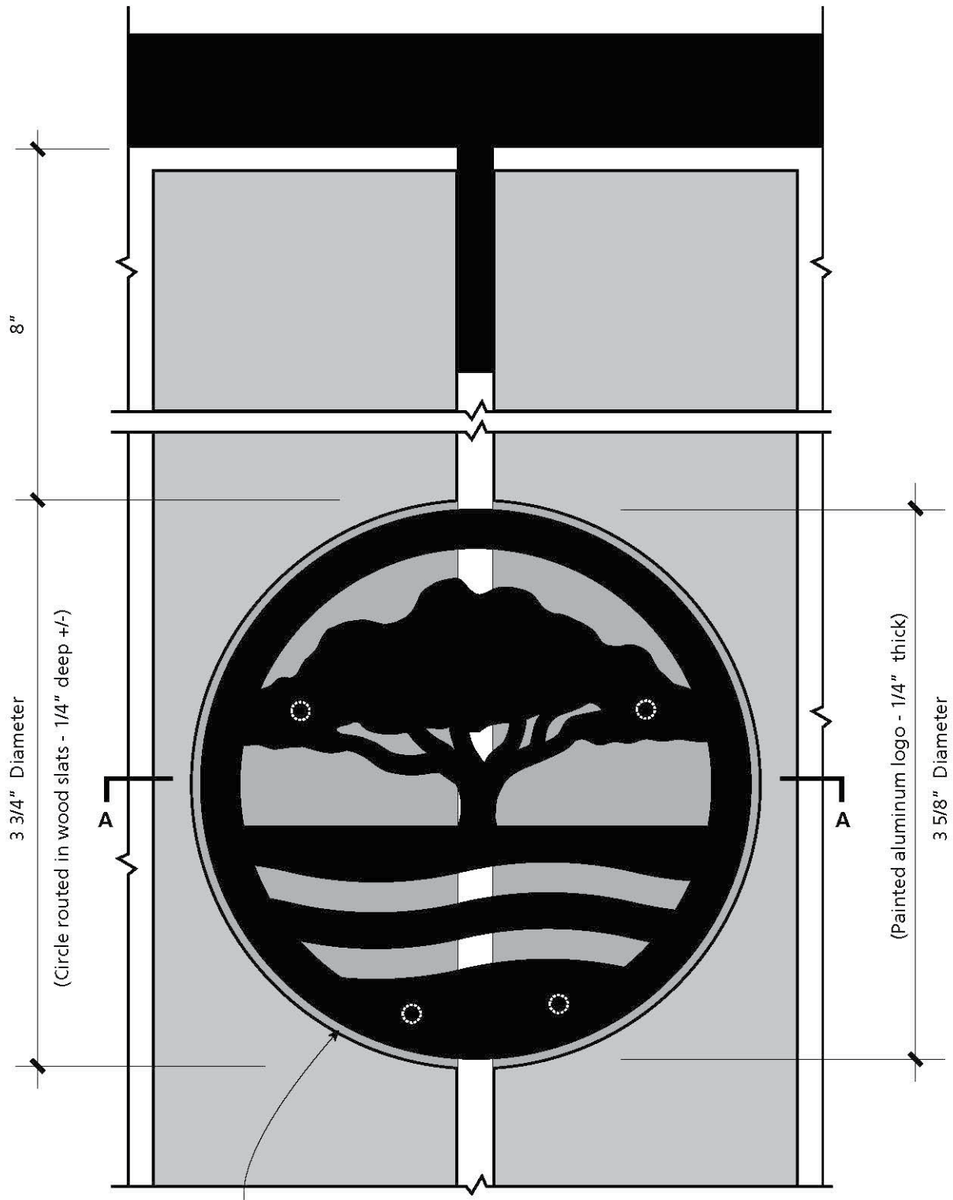

3 5/8" Dia. x 1/4" thick water-jet cut aluminum Greenway Logo. Sets into circle routed in wood. Paint all surfaces to match Matthews Acrylic Polyurethane #30132 Black, matte/semi gloss finish.(typ.) Attaches securely to wood slats with tamper-proof screws through back. No visible fasteners! (1) logo per recepticle, horizontally center on side of unit. Fabricator must verify/coordinate details and dimensions with Trash receptacle manufacturer.

**Note: Trash receptacle fabricator to rout circle in side of wood slats at size and depth to accomodate symbol. Routed wood areashould be cleaned and finished to match face of wood slats. (typ.)

See Sheet 2/W-MISC for Section A-A

1 / W-MISC Miami River Greenway Symbol - Applied to Typical Trash Receptacle
Scale: Full Size

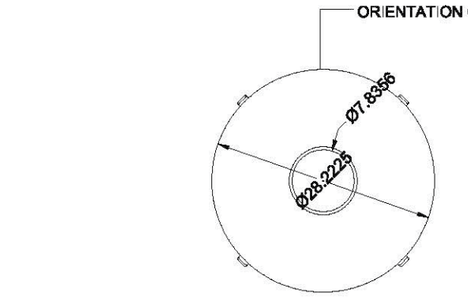

Litter Receptacle Spec.
(by others- for ref. only):

30" D x 38" H "Plainwell"
Litter Receptacle; Top opening
Ipe Wood Side Panel; 35 Gallon
Surface Mount

Manufacturer:

Landscapeforms
431 Lawndale Ave.
Kalamazoo, MI 49048
1-800-521-2546
269-381-3455 FAX

Miami River Greenway Symbol - Typical Trash location No Scale

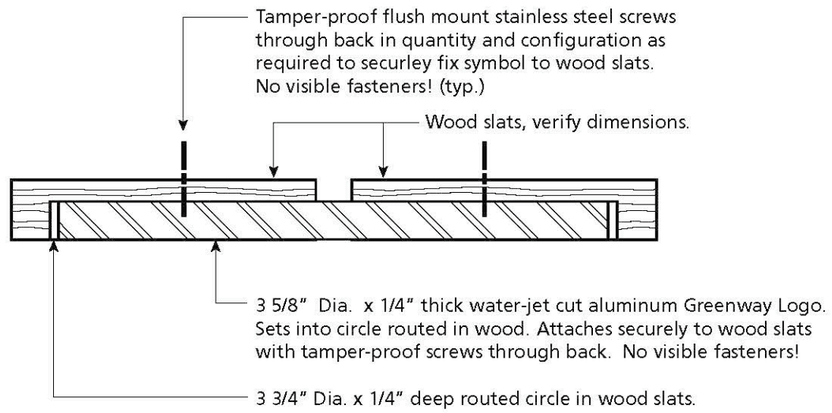

Horizontal Section A-A Through Symbol Scale: Full Size

2 / W-MISC Miami River Greenway Symbol - Typical Trash Receptacle: Section & Location
Scale: As Noted

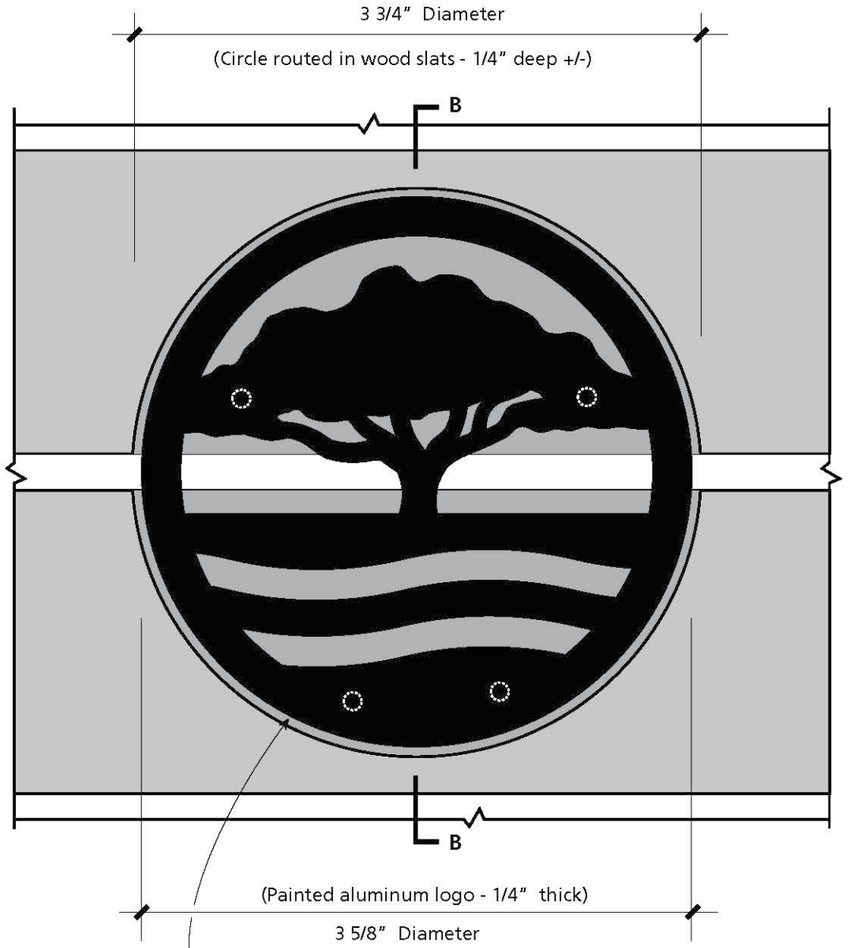

3 5/8" Dia. x 1/4" thick water-jet cut aluminum Greenway Logo. Sets into circle routed in wood. Paint all surfaces to match Matthews Acrylic Polyurethane #30132 Black, matte/semi gloss finish.(typ.) Attaches securely to wood slats with tamper-proof screws through back. No visible fasteners! (1) logo per bench, horizontally center on backrest of bench. Fabricator must verify/coordinate details and dimensions with bench manufacturer.

**Note: Bench fabricator to rout circle in side of wood slats at size and depth to accomodate symbol. Routed wood area should be cleaned and finished to match face of wood slats. (typ.)

See Sheet 4/W-MISC for Section B-B

3 / W-MISC Miami River Greenway Symbol - Applied to Typical Bench
Scale: Full Size

Bench Spec. (by others- for ref. only):

"Plainwell" Bench; 72"; Ipe Wood Seat panel with Center Arm Rest; Surface Mount

Manufacturer:

Landscapeforms 431 Lawndale Ave. Kalamazoo, MI 49048 1-800-521-2546 269-381-3455 FAX

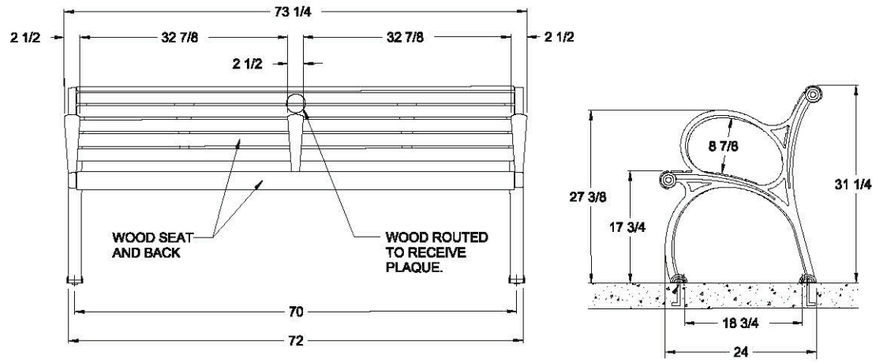

Miami River Greenway Symbol - Typical Bench location

No Scale

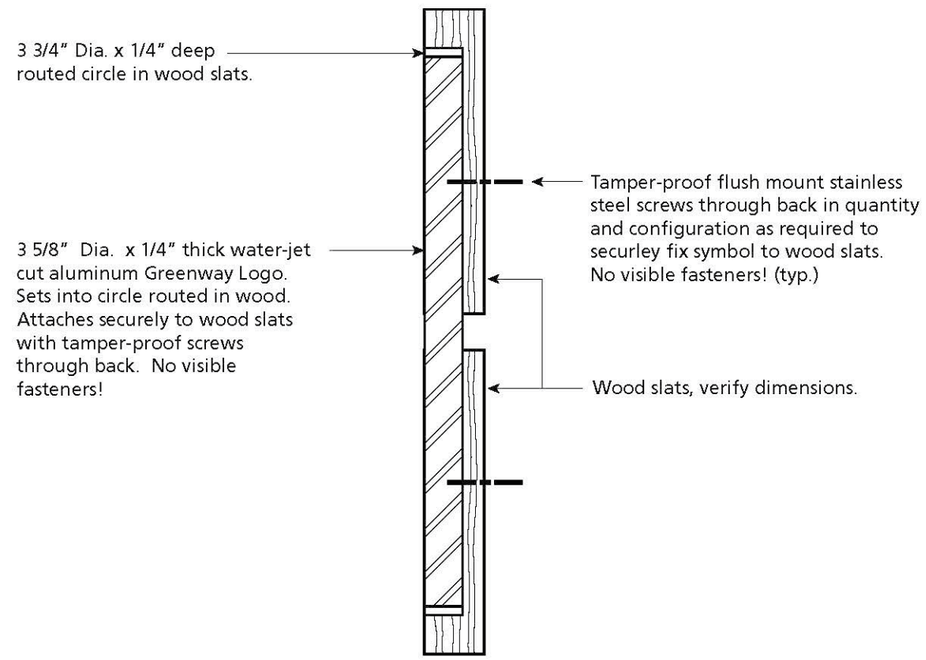

Vertical Section B-B Through Symbol

Scale: Full Size

4 / W-MISC Miami River Greenway Symbol - Typical Bench: Section & Location
Scale: As Noted